Cleveland Crane & Shovel Sales, Inc.

26781 CANNON ROAD
CLEVELAND, OH 44146
(440) 439-4749 OFFICE
(440) 439-2177 OFFICE FAX
www.craneandshovel.net

Manitowoc®

MLC300
Product Guide

ASME B30.5
Imperial

Features

- 386 USt capacity
- 330 USt capacity VPC-MAX™
- 15,515 ft-kips maximum load moment
- 29,793 ft-kips maximum load moment with VPC-MAX™
- 334.6 ft B10:500 boom
- 393.7 ft B60:500 boom with VPC-MAX™
- 137.8 ft No. 148 fixed jib on B10:500 boom
- 315.0 ft LJ10:501 luffing jib on B10:500 boom

MANITOWOC MLC300

The MLC300 combines class-leading load charts with a reduced footprint thanks to its revolutionary VPC™ technology. This delivers jobsite versatility and outstanding lifting capacity to maximize ROI.

Features

Crane Control System

The Crane Control System offers a user-friendly interface, two full graphic displays mounted horizontally for better visibility, a jog dial for easier data input and ergonomic joysticks.

Variable Position Counterweight™ (VPC™)

The Manitowoc MLC300 features a counterweight system which automatically positions the crane's counterweight as required to match lifting demands. Crane lifting capability is optimized by automatic positioning of the counterweight, eliminating the need for carbody counterweight. Additionally, counterweight boxes are designed to be common across multiple crane platforms and are utilized on Manitowoc Model MLC650 as well as future models.

VPC-MAX™

Capacity and boom and jib combination lengths can be increased through addition of the exclusive VPC-MAX™ attachment. The VPC-MAX™ attachment, configured with 98.4 ft fixed mast counterweight beam and standard VPC™ components, increases the max load moment of the MLC300. The position of the VPC-MAX™ counterweight is automatically positioned based on lifted load, boom length or boom and jib length and load radius.

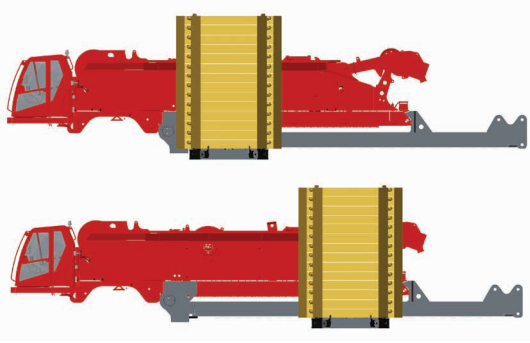

FACT™ Connectors

Manitowoc's Fast Aligning Connection Technology (FACT™) automatically aligns crane components for fast, easy assembly.

CraneSTAR®

CraneSTAR is an exclusive and innovative crane asset management system

that helps improve your profitability and reduce costs by remotely monitoring critical crane data.
Visit www.cranestar.com for more information.

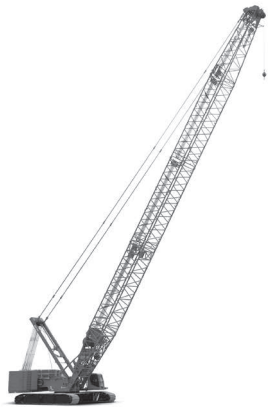

Jobsite benefits

Transportation

The MLC300 is designed to be transported globally with optimized component weights and dimensions. The MLC300 features a removable live mast shipping module and boom inserts designed to allow luffing jib inserts to ship within the boom inserts for cost-effective transport.

Rugged durability and ease of service

The MLC300 comes equipped with numerous upgrades to spend less time performing maintenance.

- Individual function hour tracking to optimize service intervals
- Remote mounted filters for easy access inside enclosures

Easy and quick assembly

The MLC300 helps you spend less time on the truck and more time on the job.

- Raise full boom and luffing jib combinations without assist
- Self-erect mast cylinder eliminates need to reeve self-assembly block

Manitowoc Crane Care™

Manitowoc Crane Care when you need it.
The assurance of the world's most advanced crane service and support to get you back to work fast.

Manitowoc Finance™

Manitowoc Finance helps you get right to work generating profits for your business.
Financial tools that help you capitalize on opportunity with solutions that fit your needs.

Contents

Outline dimensions 5
Transport data 10
Assembly 11
Performance data 13
Boom combinations 15
Working range/load charts - Main boom 16
Working range/load charts - Fixed jib 18
Working range/load charts - Luffing jib 23
Boom combinations - VPC-MAX™ 26
Working range/load charts - Main boom - VPC-MAX™ 27
Working range/ load charts - Fixed jib - VPC-MAX™ 29
Working range/ load charts - Luffing jib - VPC-MAX™ 32
Specifications 34

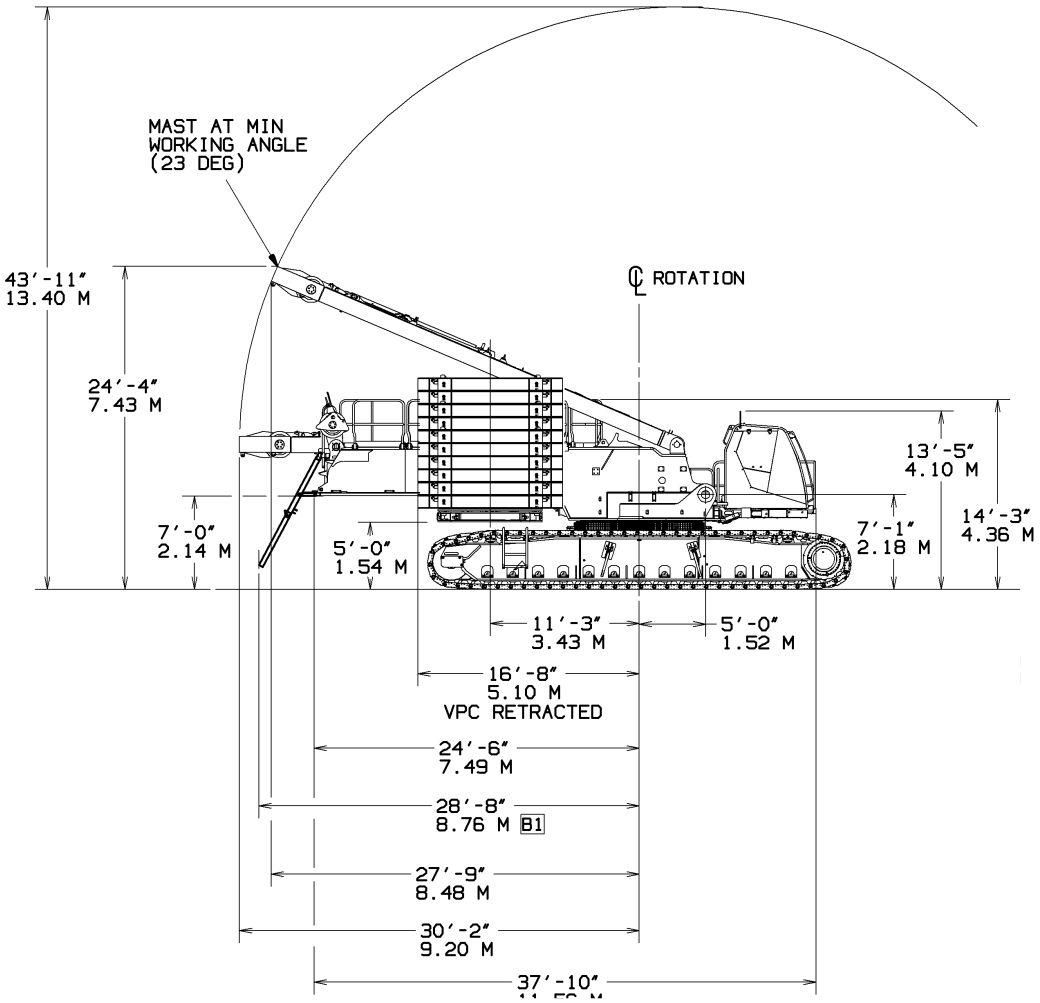

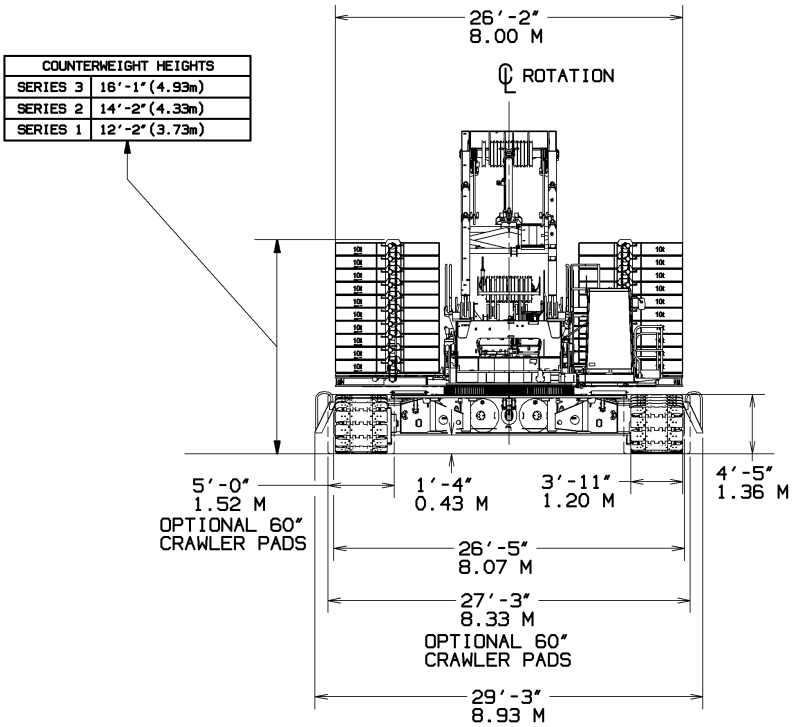

COUNTERWEIGHT HEIGHTS	
SERIES 3	16′-1″(4.93m)
SERIES 2	14′-2″(4.33m)
SERIES 1	12′-2″(3.73m)

Outline dimensions

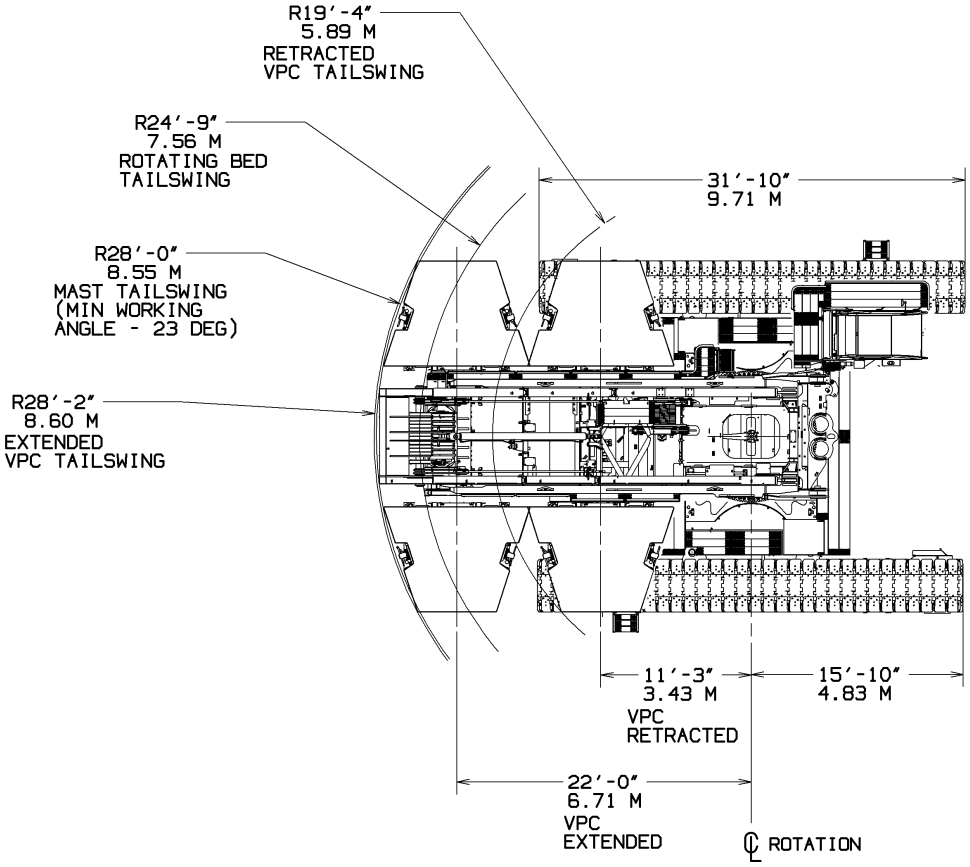

Outline dimensions

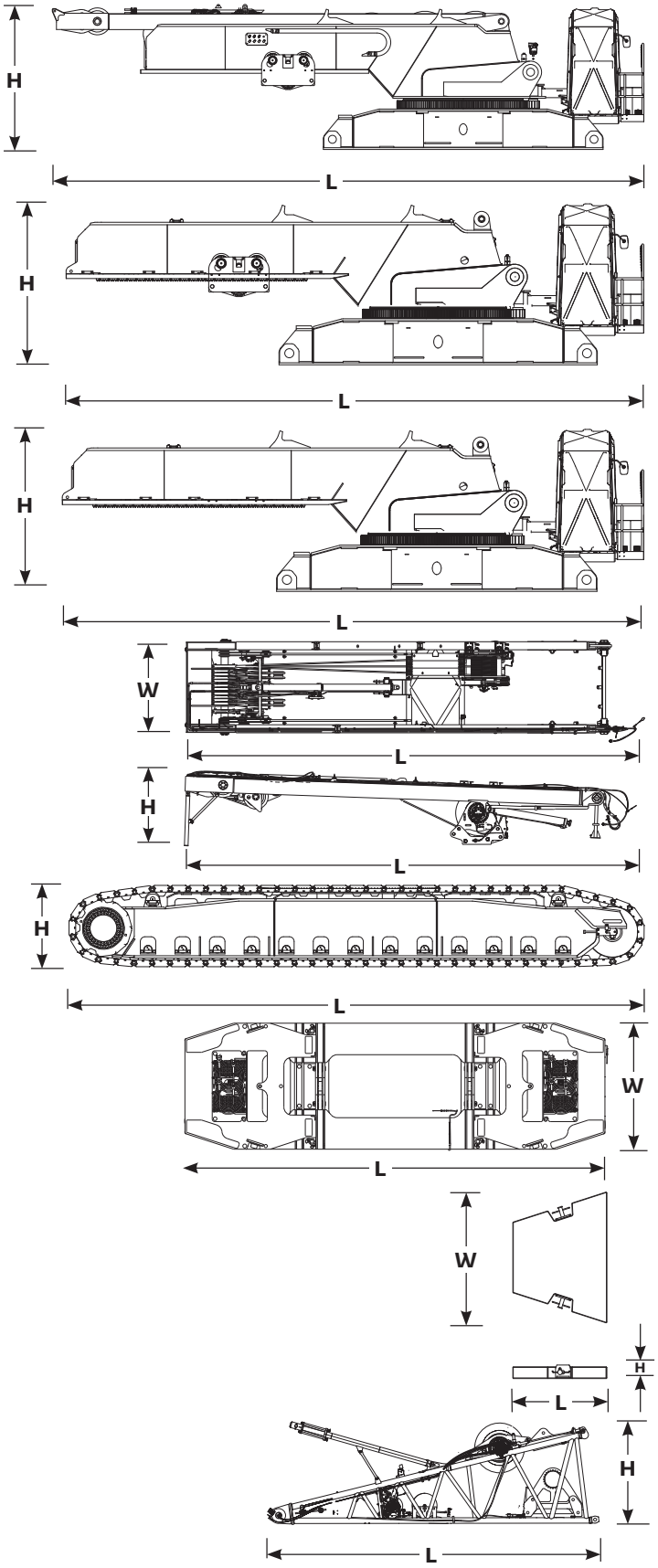

Rotating bed assembly	
Length	44' 11"
Width	9' 10"
Height	10' 6"
Weight	120,800 lb

Note: includes live mast, boom hoist, carbody jacks and VPC trolley

Rotating bed assembly	
Length	38' 1"
Width	9' 10"
Height	10' 6"
Weight	101,000 lb

Note: includes carbody jacks and VPC trolley
Note: excludes live mast, boom hoist

Rotating bed assembly	
Length	38' 1"
Width	9' 10"
Height	10' 6"
Weight	93,900 lb

Note: includes carbody jacks
Note: excludes live mast, boom hoist and VPC trolley

Live mast assembly	
Length	33' 10"
Width	7' 7"
Height	5' 11"
Weight	19,800 lb

Crawlers	
Length	31' 10"
Width	3' 11"
Height	4' 3"
Weight	50,000 lb

Counterweight tray	
Length	25' 11"
Width	7' 10"
Height	13' 1"
Weight	26,900 lb

Counterweight box	
Length	7' 10"
Width	10' 10"
Height	1' 4"
Weight	22,000 lb

26.2 ft No. 500 boom butt	
Length	27' 7"
Width	9' 6"
Height	8' 2"
Weight	36,000 lb

Note: includes main hoist, luffing/auxillary hoist, rigging winch and spring boom stop

Outline dimensions

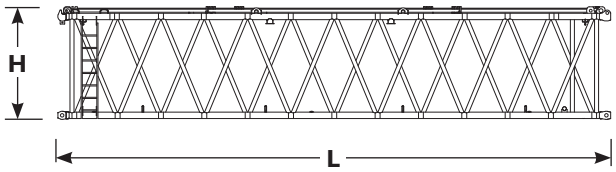

39.4 ft No. 500 main boom heavy insert	
Length	40' 0"
Width	9' 10"
Height	8' 2"
Weight	12,300 lb

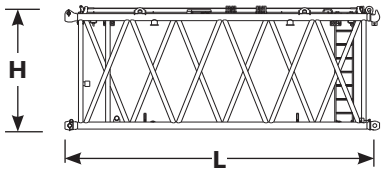

19.7 ft No. 500 main boom medium insert	
Length	20' 4"
Width	9' 10"
Height	8' 2"
Weight	5,300 lb

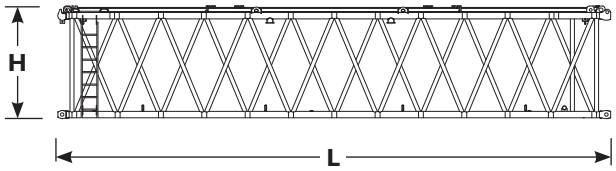

39.4 ft No. 500 main boom medium insert with equalizer brackets	
Length	40' 0"
Width	9' 10"
Height	8' 2"
Weight	9,900 lb

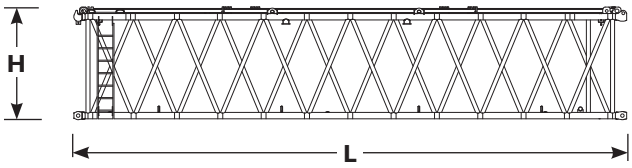

39.4 ft No. 500 main boom medium insert	
Length	40' 0"
Width	9' 10"
Height	8' 2"
Weight	8,400 lb

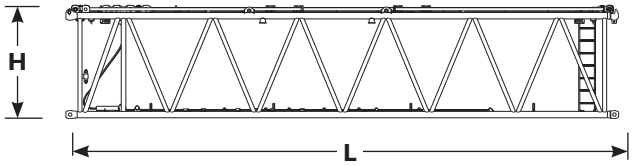

39.4 ft No. 500 main boom light insert with suspension	
Length	40' 0"
Width	9' 10"
Height	8' 2"
Weight	8,400 lb

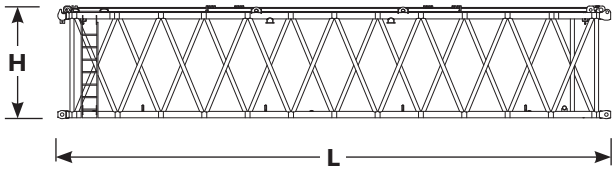

39.4 ft No. 500 main boom light insert	
Length	40' 0"
Width	9' 10"
Height	8' 2"
Weight	7,700 lb

Outline dimensions

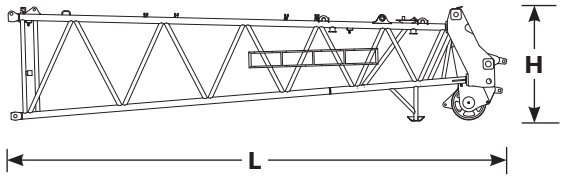

32.8 ft No. 500 boom top	
Length	36' 1"
Width	9' 10"
Height	8' 6"
Weight	17,900 lb

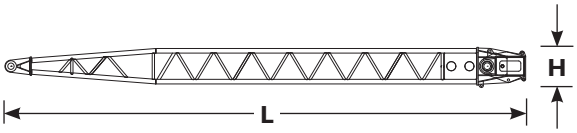

32.8 ft No. 501 luffing jib main strut	
Length	37' 9"
Width	6' 11"
Height	2' 11"
Weight	7,300 lb

Note: sheaves, straps, wire rope guide, main strut stops are included

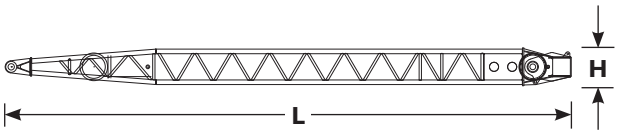

36.1 ft No. 501 luffing jib strut	
Length	41' 0"
Width	5' 7"
Height	2' 7"
Weight	10,600 lb

Note: sheaves, straps, wire rope guide are included

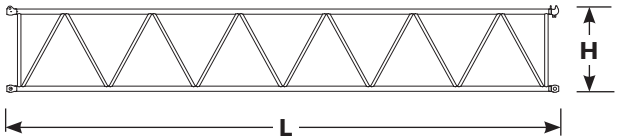

39.4 ft No. 501 luffing jib insert	
Length	39' 8"
Width	8' 6"
Height	6' 3"
Weight	5,100 lb

Note: Jib straps are included

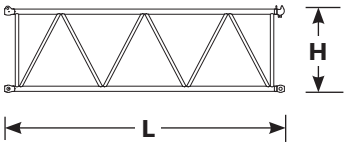

19.7 ft No. 501 luffing jib insert	
Length	20' 0"
Width	8' 6"
Height	6' 3"
Weight	2,900 lb

Note: Jib straps are included

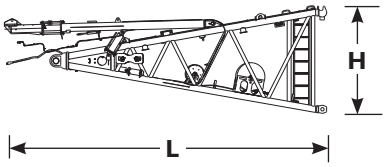

19.7 ft No. 500A luffing jib butt	
Length	20' 8"
Width	9' 11"
Height	7' 10"
Weight	7,100 lb

Note: Jib stops and hinge pins are included

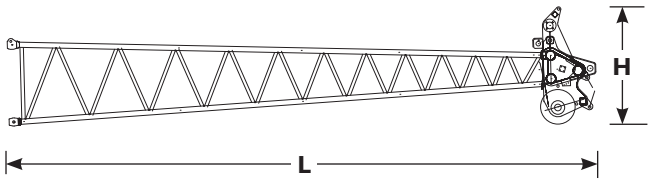

39.4 ft No. 501 luffing jib top	
Length	42' 8"
Width	8' 6"
Height	8' 6"
Weight	11,700 lb

Note: Jib straps, lower point, and wire rope guide are included are included

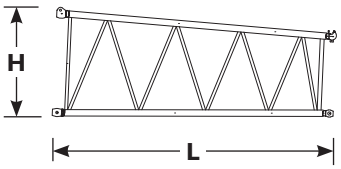

19.7 ft No. 500-501 transition insert	
Length	20' 4"
Width	9' 11"
Height	8' 2"
Weight	4,900 lb

Note: Jib straps are included

Transport data

Load summary																			
Item	255.9 ft B10:500 main boom + 39.4 ft No. 148 fixed jib Series 2 counterweight Quantity on trailer load # (Does not include blocking, strapping, etc.)																		
	Qty	Weight lb	1	2	3	4	5	6	7	8	9	10	11	12	13	14	15	16	17
Upperworks module	1	93,900	1																
Crawler assembly	2	50,000		1	1														
26.2 ft No. 500 boom butt	1	36,000				1													
Counterweight tray	1	26,900					1												
Upper counterweight box	16	22,000					1		1	1	1	1	1	1	1	2	2	2	2
Mast shipping module	1	19,800						1											
VPC™ actuator	1	7,100						1											
39.4 ft No. 500 heavy insert w/sheaves	1	12,300							1										
39.4 ft No. 500 insert medium	3	8,400								1	1	1							
39.4 ft No. 500 insert light w/ suspension	1	8,400											1						
32.8 ft No. 500 boom top	1	17,900												1					
39.4 ft No. 148 fixed jib assembly	1	7,900													1				
242 ton block	1	7,100								1									
110 ton block	1	4,200									1								
Weight ball	1	1,500										1							
Misc. job box	2	2,000											1		1				
Approximate total shipping weight kg			93,900	50,000	50,000	36,000	48,900	26,900	34,300	37,500	34,600	31,900	32,400	39,900	31,900	44,000	44,000	44,000	44,000

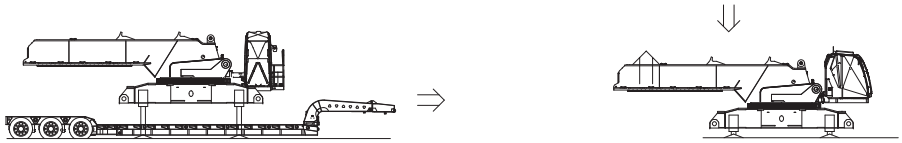

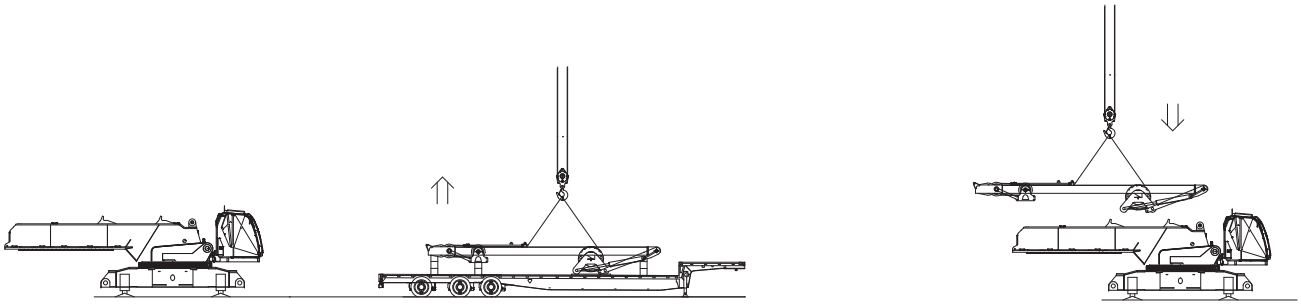

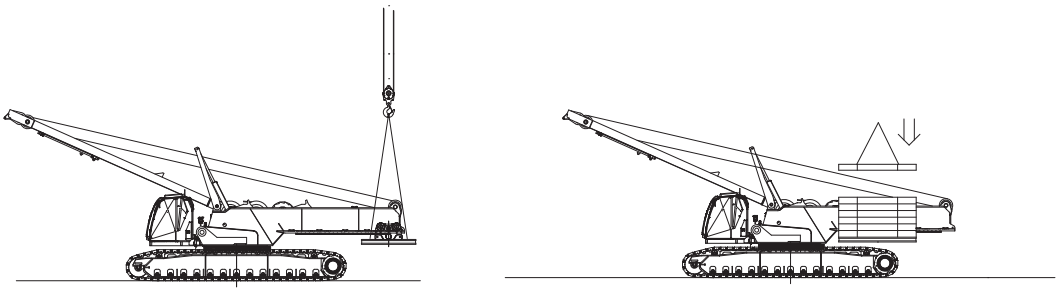

Assembly

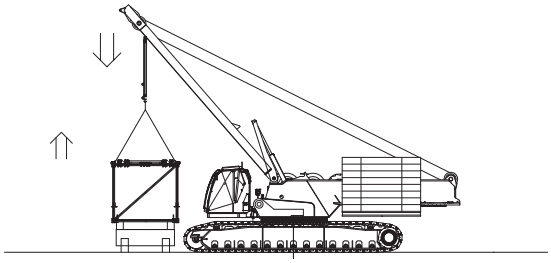

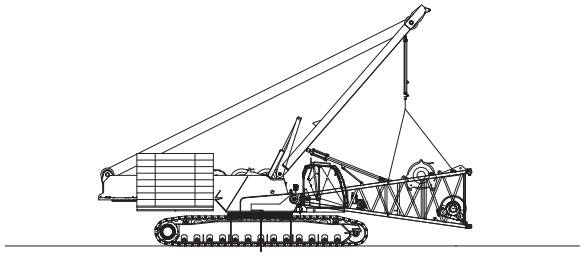

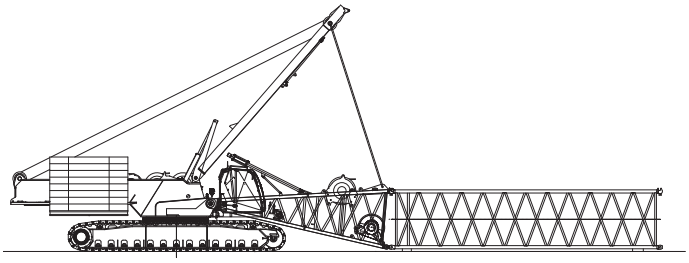

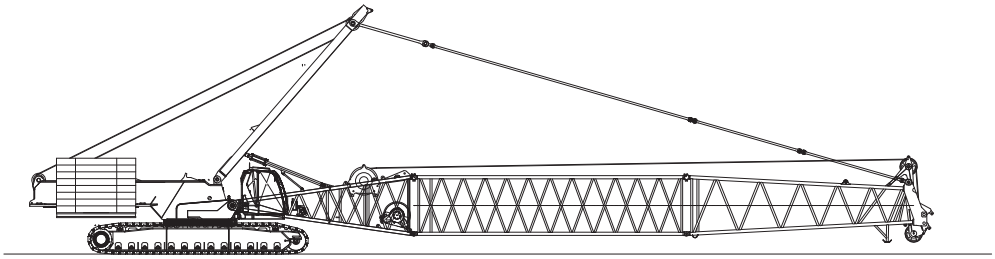

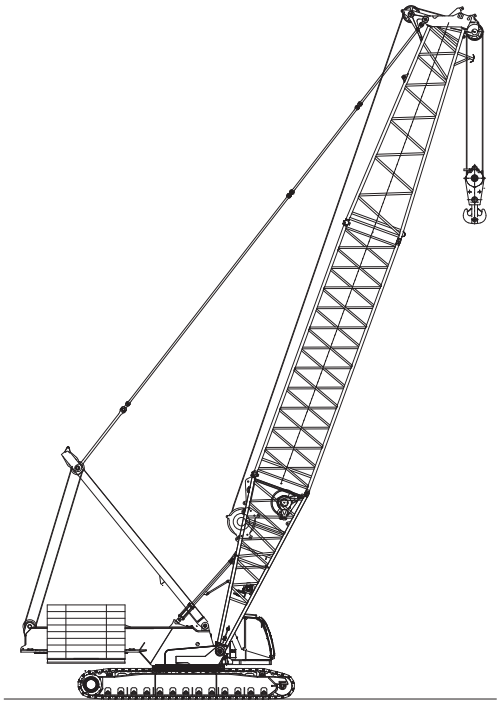

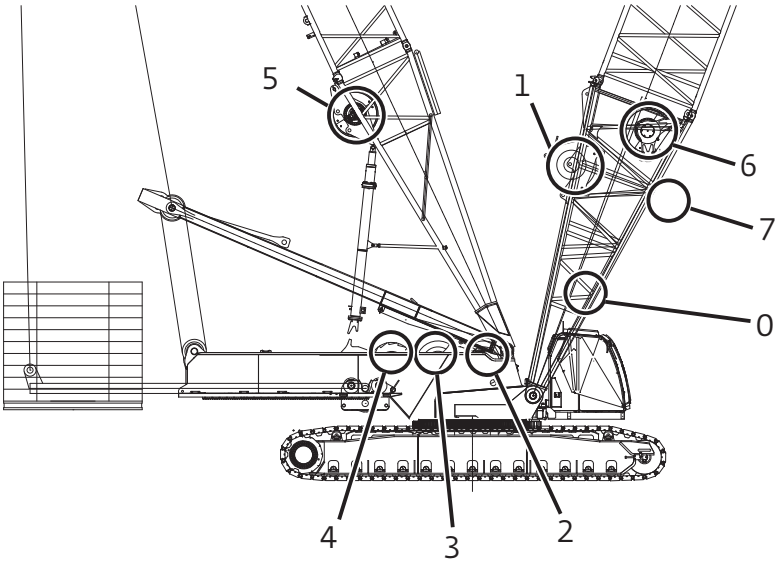

Drum identification	
Drum number	Function
1	Main hoist
2*	Auxiliary front hoist (optional)
3*	Auxiliary rear hoist (optional)
4	Boom/Mast Hoist (VPC-MAX™)
5	Boom hoist (VPC-MAX™)
6	Luffing/auxiliary hoist
7	Tagline Winch (optional, consult factory)
0	Rigging winch

**freefall optional*

Working weight	
98.4 ft B10:500 boom	673,000 lb
upper boom point	
24.5 ton hook ball	
350 ton hook block	
386,200 lb counterweight	
2 swing drives	

Performance data

B10:500 / B60:500 boom
Hoist reeving for main load block
single lead line - 28 mm wire rope

No. parts of line	Maximum load
	lb
1	36,760
2	73,520
3	110,280
4	147,040
5	183,800
6	220,560
7	257,320
8	294,080
9	330,840
10	367,600
11	404,360
12	441,120
13	477,880
14	514,640
15	551,400
16	588,160
17	624,920
18	661,400

B10:500 / B60:500 boom
Hoist reeving for drum #6
28 mm wire rope

No. parts of line	Maximum load
	lb
1	30,000
2	60,000

Performance for aux/luffing (drum #6)
28 mm wire rope
30,000 lb maximum line pull

Single line pull lb	Single line pull/single line speed lb/min						
	Layer						
	1	2	3	4	5	6	7
0	240	259	279	299	315	335	354
5,000	236	253	272	292	308	328	344
10,000	233	249	266	285	302	318	335
15,000	226	246	262	279	295	295	299
20,000	220	223	226	226	230	233	233
25,000	180	184	187	190	190	194	194
30,000	157	157	161	164	164	167	171

Performance for main (drum #1)
28 mm wire rope
36,760 lb maximum line pull

Single line pull lb	Single line pull/single line speed lb/min							
	Layer							
	1	2	3	4	5	6	7	8
0	344	371	400	427	453	482	509	535
5,000	338	367	390	404	443	469	495	522
10,000	335	358	384	410	433	459	486	509
15,000	328	351	377	384	387	390	390	394
20,000	292	292	295	299	299	302	302	305
25,000	240	240	243	243	246	249	249	253
36,760	171	171	174	177	177	180	180	184

For specific configurations refer to www.cranelibrary.com.

Boom combinations

B10:500 main boom combinations

Boom length ft	Main boom inserts ft			
	39.4 H	19.7 M	39.4 M	39.4 L
98.4	1	0	0	0
118.1	1	1	0	0
137.8	1	0	1	0
157.5	1	1	1	0
177.2	1	0	2	0
196.9	1	1	2	0
216.5	1	0	3	0
236.2	1	1	3	0
255.9	1	0	3	1
275.6	1	1	3	1
295.3	1	0	3	2
315.0	1	1	3	2
334.6	1	0	3	3

H - heavy inserts
M - medium inserts
L - light inserts

No. 148 fixed Jib combinations

Fixed jib ft	Fixed Jib inserts ft	
	19.7 ft	39.4 ft
39.4	0	0
59.1	1	0
78.7	0	1
98.4	1	1
118.1	0	2
137.8	1	2

LJ10:501 luffing jib combinations

Luffing jib length ft	Luffing jib inserts ft	
	19.7	39.4
78.7	0	0
98.4	1	0
118.1	0	1
137.8	1	1
157.5	0	2
177.2	1	2
196.9	0	3
216.5	1	3
236.2	0	4
255.9	1	4
275.6	0	5
295.3	1	5
315.0	0	6

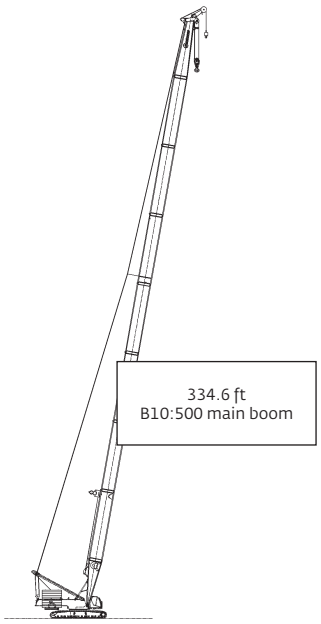

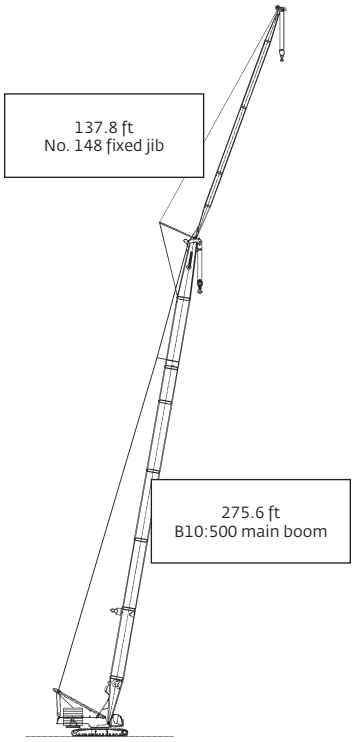

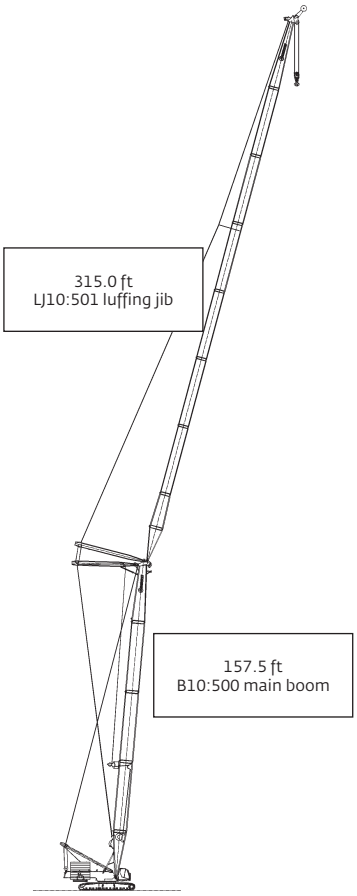

Main boom range diagram

B10:500 boom

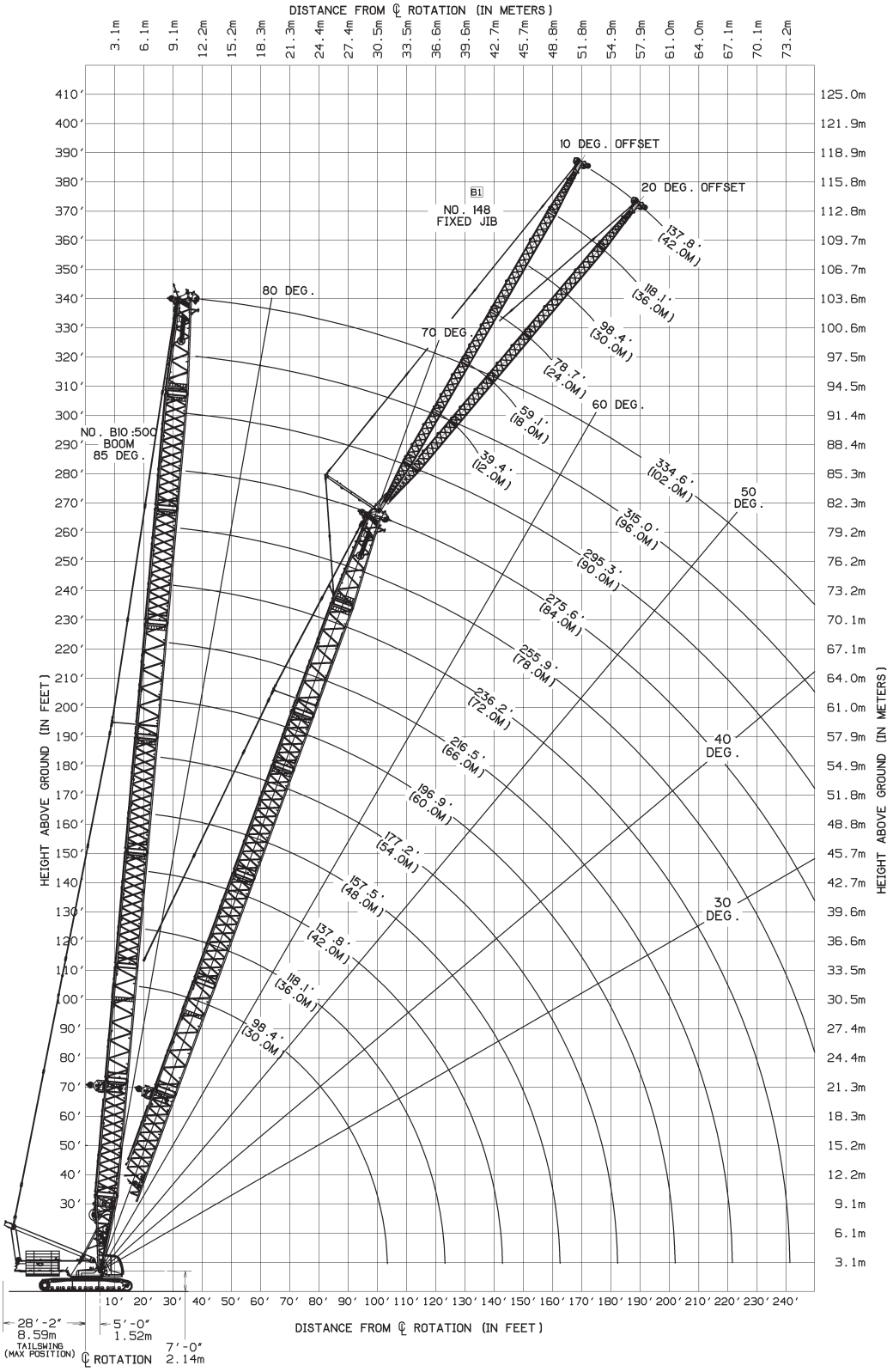

THIS CHART IS ONLY A GUIDE AND SHOULD NOT BE USED TO OPERATE THE CRANE.
The individual crane's load chart, operating instructions and other instructional plates must be read and understood prior to operating the crane

Main boom load chart

B10:500 boom Series 3

474,400 lb counterweight

360° Rating	lb x 1000											
Radius ft	Boom length ft											
	91.9	98	118	138	157	177	197	217	236	256	276	295
18	771.6 *	661.4										
20		661.4	646.4	—	—	—	—	—	—	—	—	—
22		654.9	637.6	587.6	—	—	—	—	—	—	—	—
24		612.4	597.8	579.8	536.9	491.0	—	—	—	—	—	—
26		575.0	562.5	546.9	530.4	486.8	424.0	—	—	—	—	—
28		541.7	530.9	517.3	502.8	482.8	420.8	373.4	—	—	—	—
30		512.0	502.6	490.6	477.9	464.4	410.9	366.5	308.9	—	—	—
34		455.8	453.8	444.3	434.3	423.9	388.6	348.6	306.5	255.3	216.0	—
38		389.5	393.3	395.1	397.6	389.5	367.8	331.5	295.8	253.3	214.2	181.1
40		361.6	365.1	366.9	369.3	372.2	357.9	323.3	289.0	252.3	213.3	180.3
45		306.4	309.5	311.0	312.9	315.6	318.1	303.6	272.5	249.9	211.0	178.5
50		265.5	268.4	269.6	271.2	273.7	275.9	277.4	257.0	247.4	208.8	172.4
60		209.1	211.5	212.4	213.6	215.8	217.6	218.8	220.5	221.8	201.9	158.3
70		171.9	174.0	174.7	175.7	177.7	179.2	180.3	181.7	182.8	184.2	146.3
80		145.5	147.5	148.0	148.8	150.7	152.1	153.0	154.2	155.2	156.3	135.7
90		125.9	127.7	128.2	128.8	130.6	131.8	132.6	133.7	134.6	135.6	126.5
100		110.6	112.4	112.8	113.3	115.0	116.1	116.9	117.8	118.6	118.5	118.4
110		—	100.1	100.5	101.0	102.6	103.6	104.3	105.2	105.9	102.7	103.0
120		—	—	90.5	90.9	92.5	93.4	94.1	94.9	93.1	89.7	89.8
130		—	—	82.1	82.5	84.1	84.9	85.5	83.7	82.0	78.7	78.8
140		—	—	—	75.4	76.9	77.8	77.1	74.2	72.6	69.3	69.4
150		—	—	—	69.3	70.9	69.7	68.7	65.9	64.4	61.2	61.2
160		—	—	—	—	63.9	62.2	61.4	58.6	57.2	54.1	54.1
170		—	—	—	—	56.6	55.4	54.8	52.2	50.9	47.8	47.8
180		—	—	—	—	—	49.2	48.9	46.4	45.2	42.2	42.2
190		—	—	—	—	—	43.3	43.5	41.2	40.1	37.2	37.2
200		—	—	—	—	—	—	38.5	36.5	35.5	32.6	32.7
210		—	—	—	—	—	—	33.6	32.1	31.3	28.5	28.5
220		—	—	—	—	—	—	—	27.9	27.3	24.7	24.8
230		—	—	—	—	—	—	—	23.8	23.7	21.2	21.3
240		—	—	—	—	—	—	—	—	20.2	17.9	18.1
250		—	—	—	—	—	—	—	—	16.7	14.8	15.1
260		—	—	—	—	—	—	—	—	—	11.4	12.3

**Note: Special equipment required.*

B10:500 boom Series 2

386,200 lb counterweight

360° Rating	lb x 1000										
Radius ft	Boom length ft										
	98	118	138	157	177	197	217	236	256	276	295
20	661.4	646.4	—	—	—	—	—	—	—	—	—
22	640.6	623.9	587.6	—	—	—	—	—	—	—	—
24	599.0	584.9	567.4	536.9	491.0	—	—	—	—	—	—
26	562.3	550.2	535.1	519.1	486.8	424.0	—	—	—	—	—
28	529.7	519.3	506.1	492.1	477.2	420.8	373.4	—	—	—	—
30	491.7	491.6	479.9	467.6	454.6	410.9	366.5	308.9	—	—	—
34	402.9	407.2	409.4	412.5	414.8	388.6	348.6	306.5	255.3	216.0	—
38	340.9	344.6	346.5	349.1	352.1	355.3	331.5	295.8	253.3	214.2	181.1
40	316.4	319.9	321.6	324.0	326.9	329.9	323.3	289.0	252.3	213.3	180.3
45	267.9	271.0	272.5	274.5	277.1	279.6	281.3	272.5	249.9	211.0	178.5
50	232.0	234.9	236.1	237.8	240.2	242.4	243.9	246.0	247.4	208.8	172.4
60	182.5	184.9	185.8	187.0	189.2	191.0	192.2	193.9	195.2	196.9	158.3
70	149.8	151.9	152.7	153.7	155.6	157.2	158.2	159.7	160.8	162.1	146.3
80	126.7	128.6	129.2	130.0	131.9	133.2	134.1	135.4	136.3	137.5	135.7
90	109.4	111.2	111.7	112.4	114.2	115.4	116.2	117.3	118.1	119.2	119.7
100	96.0	97.8	98.2	98.7	100.4	101.5	102.3	103.3	104.0	102.6	102.2
110	—	87.0	87.4	87.9	89.5	90.5	91.2	90.6	90.0	88.3	87.9
120	—	—	78.6	79.0	80.6	81.1	80.7	79.0	78.3	76.6	76.3
130	—	—	71.3	71.6	72.9	71.5	71.0	69.3	68.6	66.9	66.5
140	—	—	—	64.8	64.7	63.3	62.9	61.1	60.4	58.7	58.3
150	—	—	—	57.6	57.7	56.3	55.9	54.1	53.4	51.6	51.3
160	—	—	—	—	51.5	50.2	49.8	48.1	47.3	45.5	45.2
170	—	—	—	—	46.1	44.8	44.4	42.7	42.0	40.2	39.9
180	—	—	—	—	—	40.0	39.7	38.0	37.3	35.5	35.2
190	—	—	—	—	—	35.8	35.5	33.8	33.1	31.3	31.0
200	—	—	—	—	—	—	31.7	30.1	29.3	27.6	27.3
210	—	—	—	—	—	—	28.2	26.6	26.0	24.2	23.9
220	—	—	—	—	—	—	—	23.5	22.9	21.1	20.9
230	—	—	—	—	—	—	—	20.7	20.1	18.3	18.1
240	—	—	—	—	—	—	—	—	17.5	15.8	15.5
250	—	—	—	—	—	—	—	—	15.0	13.4	13.2
260	—	—	—	—	—	—	—	—	—	11.2	11.0

For complete chart, refer to www.cranelibrary.com.

THIS CHART IS ONLY A GUIDE AND SHOULD NOT BE USED TO OPERATE THE CRANE.

The individual crane's load chart, operating instructions and other instructional plates must be read and understood prior to operating the crane

Fixed jib range diagram

No. 148 fixed jib on B10:500 boom

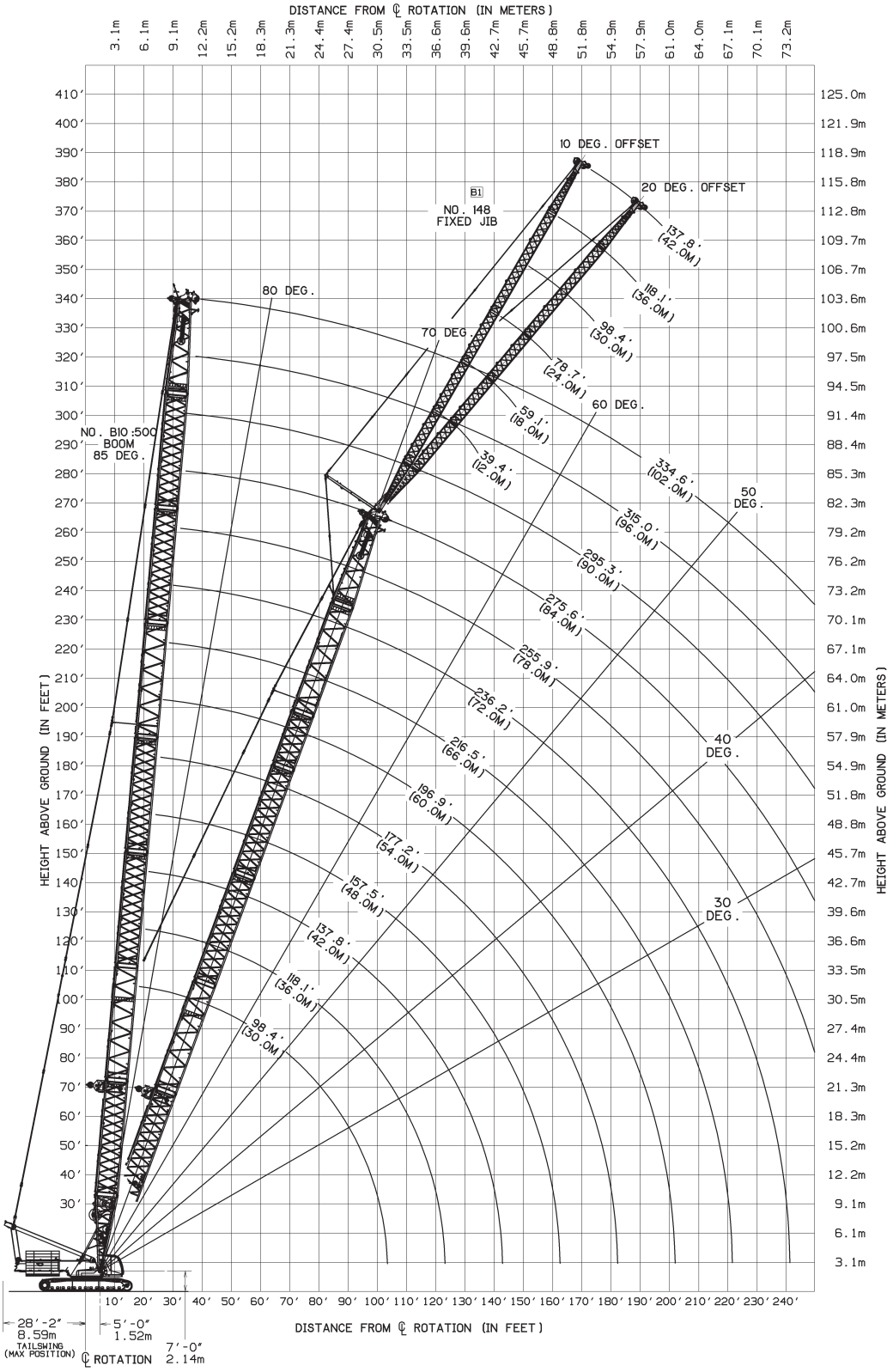

THIS CHART IS ONLY A GUIDE AND SHOULD NOT BE USED TO OPERATE THE CRANE.
The individual crane's load chart, operating instructions and other instructional plates must be read and understood prior to operating the crane

No. 148 fixed jib on B10:500 boom Series 3

474,400 lb counterweight **360° Rating** **lb x 1000**

39 ft jib length	10° offset				
Radius ft	boom length ft				
	98	138	197	256	295
30	143.3	143.3	—	—	—
40	143.3	143.3	143.3	141.8	—
50	143.3	143.3	143.3	140.3	117.5
60	134.6	143.3	143.3	138.9	107.6
80	106.7	125.6	142.1	124.1	91.6
100	88.7	105.8	112.8	110.6	79.3
120	76.5	87.8	89.9	91.6	69.6
140	68.9	72.3	74.1	73.2	61.8
160	—	60.9	62.6	57.7	54.2
180	—	—	51.5	45.6	42.2
200	—	—	41.3	35.9	32.6
220	—	—	32.5	27.9	24.6
240	—	—	—	21.1	18.0
260	—	—	—	15.2	12.3
280	—	—	—	9.8	7.3

39 ft jib length	20° offset				
Radius ft	boom length ft				
	98	138	197	256	295
34	143.3	—	—	—	—
40	135.5	143.3	—	—	—
50	119.2	129.1	138.6	129.8	104.9
60	106.7	117.4	128.3	122.2	96.9
80	88.6	99.8	112.1	109.4	83.7
100	76.4	87.2	99.8	99.2	73.4
120	68.2	77.9	90.2	90.8	65.1
140	—	71.0	74.4	74.7	58.3
160	—	61.0	62.8	58.9	52.6
180	—	—	52.2	46.6	43.4
200	—	—	41.8	36.8	33.6
220	—	—	32.7	28.6	25.5
240	—	—	—	21.6	18.7
260	—	—	—	15.5	12.8
280	—	—	—	—	7.7

79 ft jib length	10° offset				
Radius ft	boom length ft				
	98	138	177	216	276
40	86.3	—	—	—	—
50	80.9	82.6	83.1	82.4	—
60	76.1	78.5	79.7	79.7	77.2
80	67.4	71.5	73.7	74.7	73.5
100	55.2	63.2	68.5	70.2	70.2
110	50.6	58.3	65.0	68.2	68.6
120	46.7	54.1	60.6	66.2	67.1
130	43.3	50.5	56.8	62.4	65.7
140	40.4	47.3	53.4	58.9	64.2
150	37.9	44.5	50.4	55.8	62.5
160	35.7	42.0	47.8	53.0	59.0
170	33.8	39.8	45.4	50.5	52.6
180	—	37.8	43.1	48.1	46.8
190	—	36.0	41.2	46.0	41.7
200	—	34.5	39.4	44.1	37.1
220	—	—	36.3	36.3	29.1
240	—	—	32.5	29.4	22.4
260	—	—	—	23.3	16.7
280	—	—	—	17.7	11.7
300	—	—	—	—	7.2

79 ft jib length	20° offset				
Radius ft	boom length ft				
	98	138	177	216	276
60	63.5	66.7	68.8	—	—
80	51.8	56.0	59.2	61.6	63.9
100	43.8	48.3	51.8	54.7	57.8
110	40.6	45.2	48.8	51.8	55.1
120	38.0	42.5	46.2	49.2	52.7
130	35.6	40.1	43.7	46.9	50.6
140	33.6	38.0	41.6	44.7	48.5
150	31.8	36.1	39.7	42.9	46.6
160	30.4	34.4	38.0	41.1	44.9
170	29.3	32.9	36.4	39.5	43.3
180	—	31.6	35.0	38.0	41.9
190	—	30.5	33.7	36.7	40.5
200	—	29.6	32.5	35.4	39.1
220	—	—	30.6	33.3	30.8
240	—	—	29.2	30.3	23.8
260	—	—	—	23.9	17.9
280	—	—	—	—	12.6
300	—	—	—	—	8.0

For complete chart, refer to www.cranelibrary.com.

THIS CHART IS ONLY A GUIDE AND SHOULD NOT BE USED TO OPERATE THE CRANE.
The individual crane's load chart, operating instructions and other instructional plates must be read and understood prior to operating the crane

Fixed jib load chart

No. 148 fixed jib on B10:500 boom Series 3

474,400 lb counterweight **360° Rating** **lb x 1000**

98 ft jib length	10° offset				
Radius ft	boom length ft				
	98	138	197	256	276
50	65.1	65.9	65.8	—	—
60	61.3	62.8	63.4	62	61.3
70	57.4	59.8	61.2	60.3	59.7
80	53.7	56.7	59	58.7	58.3
90	50.3	53.7	56.9	57.2	56.9
100	47.2	50.9	54.6	55.6	55.5
120	40.9	46	50.3	52.4	52.7
140	34.9	40.8	46.5	49.1	49.7
160	30.4	35.8	42.9	46.2	46.9
180	26.9	31.8	38.5	43.6	44.4
200	—	28.6	34.9	40.3	38.3
220	—	26.1	31.9	33.3	30.4
240	—	—	29.3	26.5	23.7
260	—	—	26.2	20.8	18
280	—	—	20.6	15.8	13.1
300	—	—	—	11.3	8.7
320	—	—	—	7.3	—

98 ft jib length	20° offset				
Radius ft	boom length ft				
	98	138	197	256	276
60	54.8	—	—	—	—
70	50.9	52.9	53.8	—	—
80	45.9	49	51.8	51.9	51.8
90	41.7	45.1	48.9	50.4	50.4
100	38.2	41.8	45.8	48.4	49
120	32.7	36.3	40.6	43.6	44.6
140	28.5	32.1	36.4	39.7	40.7
160	25.2	28.7	33	36.3	37.4
180	22.8	25.9	30.1	33.5	34.6
200	—	23.8	27.8	31.1	32.2
220	—	22.1	25.8	29	30
240	—	—	24.1	27.2	25.6
260	—	—	22.7	22.2	19.6
280	—	—	21.1	17	14.4
300	—	—	—	12.3	9.8
320	—	—	—	8	—

138 ft jib length	10° offset				
Radius ft	boom length ft				
	98	138	197	256	276
50	44.2	—	—	—	—
60	41.1	42	42.2	—	—
70	38.1	39.5	40.6	39.1	38.5
80	35.2	37.1	38.6	38.1	37.6
90	32.6	34.7	36.7	37.1	36.7
100	30.1	32.5	34.9	35.8	35.7
120	25.8	28.5	31.4	33	33.3
140	22.2	25	28.3	30.3	30.8
160	19.2	22.1	25.5	27.8	28.5
180	16.8	19.5	23	25.5	26.3
200	14.7	17.4	20.8	23.5	24.3
220	13	15.5	18.9	21.6	22.5
240	—	13.9	17.2	19.9	20.8
260	—	12.7	15.7	18.4	19.3
280	—	—	14.4	17.1	15.5
300	—	—	13.2	13.9	11.3
320	—	—	12.4	10.1	7.5
340	—	—	—	6.6	—

138 ft jib length	20° offset				
Radius ft	boom length ft				
	98	138	197	256	276
80	31.1	32	32.8	—	—
90	28.8	30	31.1	31.4	31.5
100	26.8	28.2	29.6	30.2	30.3
120	23.1	24.9	26.8	27.9	28.1
140	20.2	22.1	24.3	25.7	26.1
160	17.6	19.7	22	23.7	24.2
180	15.5	17.6	20.1	21.9	22.5
200	13.8	15.8	18.4	20.3	20.9
220	12.5	14.4	16.8	18.9	19.5
240	—	13.2	15.6	17.6	18.2
260	—	12.3	14.4	16.4	17.1
280	—	—	13.5	15.4	16
300	—	—	12.7	14.5	13.1
320	—	—	12.1	11.5	9.1
340	—	—	—	7.7	—

For complete chart, refer to www.cranelibrary.com.

THIS CHART IS ONLY A GUIDE AND SHOULD NOT BE USED TO OPERATE THE CRANE.
The individual crane's load chart, operating instructions and other instructional plates must be read and understood prior to operating the crane

No. 148 fixed jib on B10:500 boom Series 2

386,200 lb counterweight **360° Rating** **lb x 1000**

39 ft jib length	10° offset				
Radius ft	boom length ft				
	98	138	197	256	295
30	143.3	143.3	—	—	—
40	143.3	143.3	143.3	141.8	—
50	143.3	143.3	143.3	140.3	117.5
60	134.6	143.3	143.3	138.9	107.6
80	106.7	125.6	130.2	124.1	91.6
100	88.7	95.7	98.2	100.3	79.3
120	74.9	75.9	78	79.8	69.6
140	61.2	62.2	64.1	61.6	59.3
160	—	52.2	51.8	48.3	45.9
180	—	—	41.6	38	35.7
200	—	—	33.4	30	27.6
220	—	—	26.7	23.4	21
240	—	—	—	17.9	15.6
260	—	—	—	13.3	10.4
280	—	—	—	8.8	—

39 ft jib length	20° offset				
Radius ft	boom length ft				
	98	138	197	256	295
34	143.3	—	—	—	—
40	135.5	143.3	—	—	—
50	119.2	129.1	138.6	129.8	104.9
60	106.7	117.4	128.3	122.2	96.9
80	88.6	99.8	112.1	109.4	83.7
100	76.4	87.2	98.7	99.2	73.4
120	68.2	76.2	78.4	80.1	65.1
140	—	62.4	64.4	62.9	58.3
160	—	52.3	52.5	49.3	47.1
180	—	—	42.1	38.9	36.7
200	—	—	33.8	30.6	28.4
220	—	—	26.9	23.9	21.7
240	—	—	—	18.3	16.1
260	—	—	—	13.5	10.9

79 ft jib length	10° offset				
Radius ft	boom length ft				
	98	138	177	216	276
40	86.3	—	—	—	—
50	80.9	82.6	83.1	82.4	—
60	76.1	78.5	79.7	79.7	77.2
80	67.4	71.5	73.7	74.7	73.5
100	55.2	63.2	68.5	70.2	70.2
110	50.6	58.3	65	68.2	68.6
120	46.7	54.1	60.6	66.2	67.1
130	43.3	50.5	56.8	62.4	65.7
140	40.4	47.3	53.4	58.9	64.1
150	37.9	44.5	50.4	55.8	56.8
160	35.7	42	47.8	53	50.5
170	33.8	39.8	45.4	49.3	44.9
180	—	37.8	43.1	44.4	40
190	—	36	41.2	40.1	35.6
200	—	34.5	38.8	36.2	31.7
220	—	—	32.1	29.6	25
240	—	—	26.4	24	19.4
260	—	—	—	19.3	14.7
280	—	—	—	15.1	10.3

79 ft jib length	20° offset				
Radius ft	boom length ft				
	98	138	177	216	276
60	63.5	66.7	68.8	—	—
80	51.8	56	59.2	61.6	63.9
100	43.8	48.3	51.8	54.7	57.8
110	40.6	45.2	48.8	51.8	55.1
120	38	42.5	46.2	49.2	52.7
130	35.6	40.1	43.7	46.9	50.6
140	33.6	38	41.6	44.7	48.5
150	31.8	36.1	39.7	42.9	46.6
160	30.4	34.4	38	41.1	44.9
170	29.3	32.9	36.4	39.5	43.3
180	—	31.6	35	38	41.9
190	—	30.5	33.7	36.7	37.4
200	—	29.6	32.5	35.4	33.3
220	—	—	30.6	30.5	26.4
240	—	—	26.7	24.7	20.6
260	—	—	—	19.8	15.7
280	—	—	—	—	11.3
300	—	—	—	—	6.8

For complete chart, refer to www.cranelibrary.com.

THIS CHART IS ONLY A GUIDE AND SHOULD NOT BE USED TO OPERATE THE CRANE.
The individual crane's load chart, operating instructions and other instructional plates must be read and understood prior to operating the crane

Fixed jib load chart

No. 148 fixed jib on B10:500 boom Series 2

386,200 lb counterweight **360° Rating** **lb x 1000**

98 ft jib length	10° offset				
Radius ft	boom length ft				
	98	138	197	256	276
50	65.1	65.9	65.8		
60	61.3	62.8	63.4	62.0	61.3
80	53.7	56.7	59.0	58.7	58.3
100	47.2	50.9	54.6	55.6	55.5
120	40.9	46.0	50.3	52.4	52.7
140	34.9	40.8	46.5	49.1	49.7
160	30.4	35.8	42.9	46.2	46.9
180	26.9	31.8	38.5	42.8	41.1
200		28.6	34.9	34.5	32.8
220		26.1	31.6	27.8	26.1
240			26.1	22.3	20.5
260			21.4	17.6	15.8
280			17.2	13.6	11.6
300				9.9	7.4

98 ft jib length	20° offset				
Radius ft	boom length ft				
	98	138	197	256	276
60	54.8				
80	45.9	49.0	51.8	51.9	51.8
100	38.2	41.8	45.8	48.4	49.0
120	32.7	36.3	40.6	43.6	44.6
140	28.5	32.1	36.4	39.7	40.7
160	25.2	28.7	33.0	36.3	37.4
180	22.8	25.9	30.1	33.5	34.6
200		23.8	27.8	31.1	32.2
220		22.1	25.8	29.0	27.9
240			24.1	23.7	22.1
260			22.0	18.7	17.1
280			17.6	14.5	12.9
300				10.8	8.5
320				6.8	

138 ft jib length	10° offset				
Radius ft	boom length ft				
	98	138	197	256	276
50	44.2				
60	41.1	42.0	42.2		
80	35.2	37.1	38.6	38.1	37.6
100	30.1	32.5	34.9	35.8	35.7
120	25.8	28.5	31.4	33.0	33.3
140	22.2	25.0	28.3	30.3	30.8
160	19.2	22.1	25.5	27.8	28.5
180	16.8	19.5	23.0	25.5	26.3
200	14.7	17.4	20.8	23.5	24.3
220	13.0	15.5	18.9	21.6	22.5
240		13.9	17.2	19.9	20.8
260		12.7	15.7	18.4	17.9
280			14.4	15.6	13.8
300			13.2	12.1	9.9
320			12.4	8.6	

138 ft jib length	20° offset				
Radius ft	boom length ft				
	98	138	197	256	276
80	31.1	32.0	32.8		
100	26.8	28.2	29.6	30.2	30.3
120	23.1	24.9	26.8	27.9	28.1
140	20.2	22.1	24.3	25.7	26.1
160	17.6	19.7	22.0	23.7	24.2
180	15.5	17.6	20.1	21.9	22.5
200	13.8	15.8	18.4	20.3	20.9
220	12.5	14.4	16.8	18.9	19.5
240		13.2	15.6	17.6	18.2
260		12.3	14.4	16.4	17.1
280			13.5	15.4	15.5
300			12.7	13.4	11.8
320			12.1	10.0	7.8

For complete chart, refer to www.cranelibrary.com.

THIS CHART IS ONLY A GUIDE AND SHOULD NOT BE USED TO OPERATE THE CRANE.
The individual crane's load chart, operating instructions and other instructional plates must be read and understood prior to operating the crane

LJ10:501 luffing jib on B10:500 boom

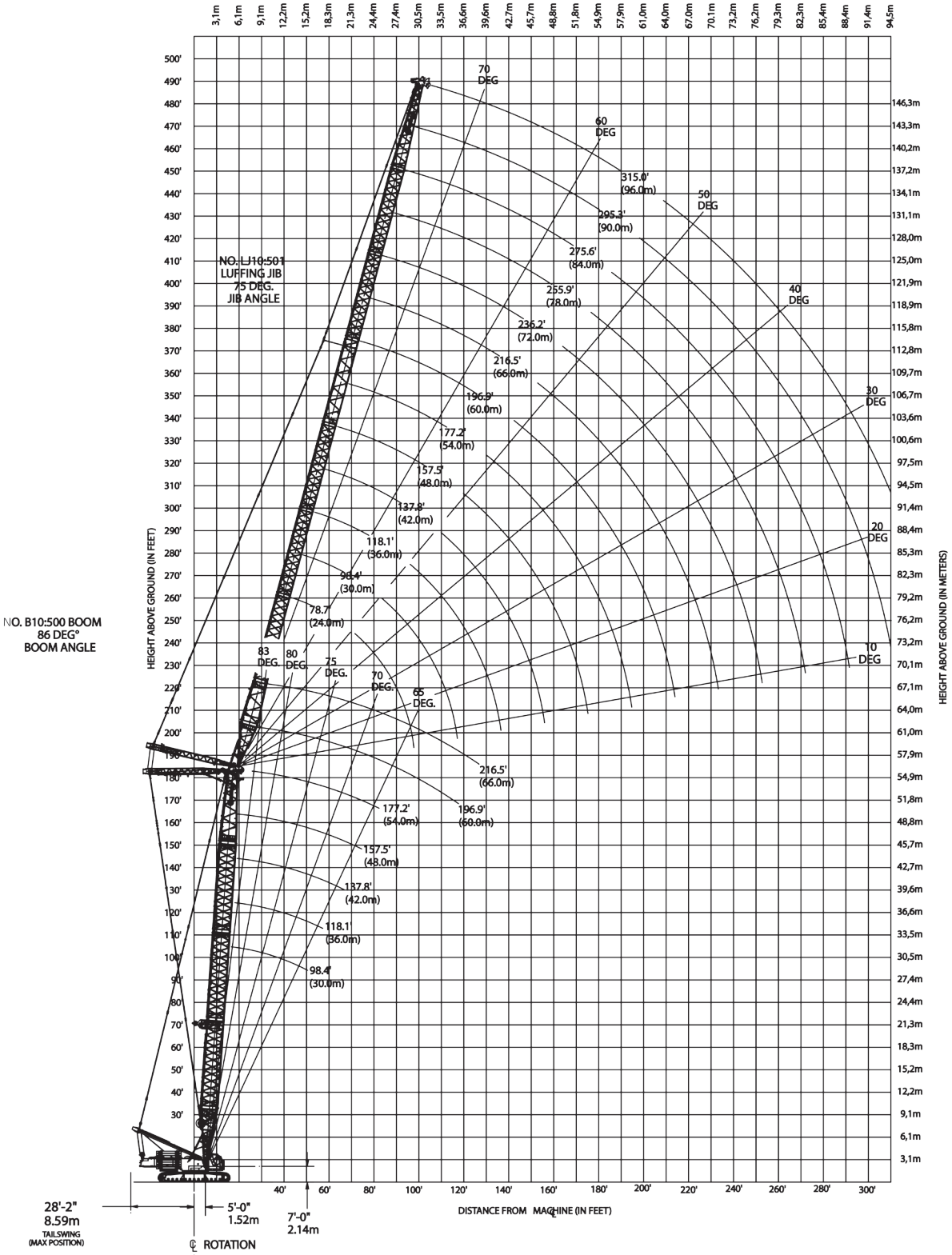

THIS CHART IS ONLY A GUIDE AND SHOULD NOT BE USED TO OPERATE THE CRANE.
The individual crane's load chart, operating instructions and other instructional plates must be read and understood prior to operating the crane

Luffing jib load charts

LJ10:501 luffing jib on B10:500 boom Series 3

474,400 lb counterweight **360° Rating** **lb x 1000** **86° boom angle**

98 ft boom length

Radius ft	Luffing jib length ft				
	79	138	197	256	295
38	330.7	—	—	—	—
40	311.8	—	—	—	—
50	259.6	—	—	—	—
60	221.2	194.4	—	—	—
70	192.1	175.3	133.1	—	—
80	164.6	155.9	128.1	—	—
90	138.6	139.8	123.2	74.5	—
100	—	126.4	114.6	72.6	50.3
110	—	114.9	104.9	70.8	48.7
120	—	104.2	96.3	69.0	47.2
130	—	94.8	88.8	67.2	45.8
140	—	84.4	82.1	65.6	44.4
150	—	65.8	76.1	64.1	43.1
160	—	—	70.8	62.7	42.3
170	—	—	66.0	59.3	40.8
180	—	—	61.6	55.4	39.8
190	—	—	55.8	51.8	38.9
200	—	—	47.7	47.4	38.0
210	—	—	34.6	43.0	37.2
220	—	—	—	38.8	36.5
230	—	—	—	34.7	35.8
240	—	—	—	30.8	34.4
250	—	—	—	27.2	32.2
260	—	—	—	23.7	30.2
270	—	—	—	—	28.4
280	—	—	—	—	25.1
290	—	—	—	—	20.2
300	—	—	—	—	15.0

138 ft boom length

Radius ft	Luffing jib length ft				
	79	138	197	256	295
40	312.0	—	—	—	—
50	271.0	—	—	—	—
60	228.1	191.2	—	—	—
70	193.0	174.9	—	—	—
80	166.7	159.7	118.6	—	—
90	145.4	143.9	117.2	68.7	—
100	—	130.0	112.8	67.4	47.4
110	—	116.8	107.0	66.0	46.2
120	—	106.0	101.3	64.7	45.0
130	—	97.0	95.8	63.4	43.8
140	—	88.8	90.1	62.1	42.7
150	—	75.5	83.5	60.9	41.6
160	—	—	77.1	59.7	40.6
170	—	—	70.0	58.7	39.6
180	—	—	63.2	55.5	38.7
190	—	—	56.6	51.6	37.8
200	—	—	50.0	47.5	37.0
210	—	—	42.6	43.5	36.3
220	—	—	—	39.4	35.6
230	—	—	—	35.5	35.0
240	—	—	—	31.7	34.4
250	—	—	—	28.1	33.2
260	—	—	—	24.7	30.1
270	—	—	—	21.7	27.1
280	—	—	—	—	24.1
290	—	—	—	—	21.0
300	—	—	—	—	17.8
310	—	—	—	—	13.9

157 ft boom length

Radius ft	Luffing jib length ft				
	79	138	197	256	295
45	278.8	—	—	—	—
50	261.0	—	—	—	—
60	228.3	187.5	—	—	—
70	192.8	172.8	—	—	—
80	167.9	158.9	109.8	—	—
90	146.4	144.5	108.5	65.2	—
100	—	130.2	107.1	64.2	45.6
110	—	117.4	104.9	63.0	44.6
120	—	106.7	99.6	61.9	43.6
130	—	97.6	94.5	60.7	42.5
140	—	86.8	88.2	59.6	41.5
150	—	74.4	81.4	58.6	40.5
160	—	—	74.4	57.5	39.6
170	—	—	67.5	56.6	38.7
180	—	—	61.0	54.8	37.8
190	—	—	54.7	51.1	37.0
200	—	—	48.5	47.3	36.3
210	—	—	41.7	43.5	35.6
220	—	—	—	39.6	34.9
230	—	—	—	35.8	34.3
240	—	—	—	32.1	33.8
250	—	—	—	28.5	31.5
260	—	—	—	25.1	28.5
270	—	—	—	22.1	25.6
280	—	—	—	—	22.8
290	—	—	—	—	19.8
300	—	—	—	—	16.8
310	—	—	—	—	13.2

197 ft boom length

Radius ft	Luffing jib length ft				
	79	118	157	177	197
45	231.3	—	—	—	—
50	217.9	—	—	—	—
60	192.8	167.3	—	—	—
70	170.7	156.6	124.5	107.8	—
80	151.6	142.1	121.6	106.0	91.4
90	134.6	129.1	117.6	103.8	90.0
100	—	117.5	108.5	101.3	88.4
110	—	107.1	100.0	95.9	86.7
120	—	97.5	92.4	89.0	84.8
130	—	88.5	85.3	82.5	79.4
140	—	—	78.8	76.6	74.0
150	—	—	72.7	71.1	68.9
160	—	—	66.9	65.9	64.3
170	—	—	60.5	61.0	59.9
180	—	—	—	56.2	55.6
190	—	—	—	50.0	51.6
200	—	—	—	—	47.3
210	—	—	—	—	41.4

For complete chart, refer to www.cranelibrary.com.

THIS CHART IS ONLY A GUIDE AND SHOULD NOT BE USED TO OPERATE THE CRANE.
The individual crane's load chart, operating instructions and other instructional plates must be read and understood prior to operating the crane

LJ10:501 luffing jib on B10:500 boom Series 2

386,200 lb counterweight **360° Rating** **lb x 1000** **86° boom angle**

98 ft boom length

Radius ft	Luffing jib length ft				
	79	138	197	256	295
40	311.8	—	—	—	—
50	259.6	—	—	—	—
60	206.1	194.4	—	—	—
70	170.8	172.7	133.1	—	—
80	145.7	147.3	128.1	—	—
90	127.1	128.5	123.2	74.5	—
100	—	113.9	114.6	72.6	50.3
110	—	102.2	103.2	70.8	48.7
120	—	92.7	93.6	69.0	47.2
130	—	84.8	85.7	67.2	45.8
140	—	78.2	78.9	65.6	44.4
150	—	65.8	72.9	64.1	43.1
160	—	—	66.7	62.7	42.3
170	—	—	61.3	58.6	40.8
180	—	—	56.5	53.8	39.8
190	—	—	52.2	49.6	38.9
200	—	—	47.7	45.8	38.0
210	—	—	34.6	42.4	37.2
220	—	—		38.8	36.5
230	—	—	—	34.7	34.8
240	—	—	—	30.8	32.3
250	—	—	—	27.2	29.9
260	—	—	—	23.7	27.8
270	—	—	—	—	25.7
280	—	—	—	—	23.9
290	—	—	—	—	20.2
300	—	—	—	—	15.0

138 ft boom length

Radius ft	Luffing jib length ft				
	79	138	197	256	295
40	312.0	—	—	—	—
50	263.6	—	—	—	—
60	209.1	191.2	—	—	—
70	173.3	174.9	—	—	—
80	147.9	149.5	118.6	—	—
90	128.9	130.3	117.2	68.7	—
100	—	115.5	112.8	67.4	47.4
110	—	103.7	104.7	66.0	46.2
120	—	94.1	95.0	64.7	45.0
130	—	86.1	86.9	63.4	43.8
140	—	79.3	79.3	62.1	42.7
150	—	73.5	72.3	60.9	41.6
160	—	—	66.1	59.7	40.6
170	—	—	60.8	58.0	39.6
180	—	—	56.0	53.3	38.7
190	—	—	51.8	49.1	37.8
200	—	—	48.0	45.4	37.0
210	—	—	42.6	42.0	36.3
220	—	—	—	38.9	35.6
230	—	—	—	35.5	34.4
240	—	—	—	31.7	31.8
250	—	—	—	28.1	29.5
260	—	—	—	24.7	27.4
270	—	—	—	21.7	25.4
280	—	—	—	—	23.5
290	—	—	—	—	21.0
300	—	—	—	—	17.8
310	—	—	—	—	13.9

157 ft boom length

Radius ft	Luffing jib length ft				
	79	138	197	256	295
50	261.0	—	—	—	—
60	210.7	187.5	—	—	—
70	174.6	172.8	—	—	—
80	149.0	150.6	109.8	—	—
90	129.9	131.3	108.5	65.2	—
100	—	116.4	107.1	64.2	45.6
110	—	104.5	104.9	63.0	44.6
120	—	94.8	95.7	61.9	43.6
130	—	86.7	87.1	60.7	42.5
140	—	79.9	78.9	59.6	41.5
150	—	74.1	71.9	58.6	40.5
160	—	—	65.8	57.5	39.6
170	—	—	60.5	56.6	38.7
180	—	—	55.7	53.0	37.8
190	—	—	51.5	48.8	37.0
200	—	—	47.7	45.1	36.3
210	—	—	41.7	41.7	35.6
220	—	—	—	38.7	34.9
230	—	—	—	35.8	34.1
240	—	—	—	32.1	31.6
250	—	—	—	28.5	29.3
260	—	—	—	25.1	27.1
270	—	—	—	22.1	25.2
280	—	—	—	—	22.8
290	—	—	—	—	19.8
300	—	—	—	—	16.8
310	—	—	—	—	13.2

197 ft boom length

Radius ft	Luffing jib length ft				
	79	118	157	177	197
50	217.9	—	—	—	—
60	192.8	167.3	—	—	—
70	170.7	156.6	124.5	107.8	—
80	150.8	142.1	121.6	106.0	91.4
90	131.5	129.1	117.6	103.8	90.0
100	—	117.3	108.5	101.3	88.4
110	—	105.4	100.0	95.9	86.7
120	—	95.6	92.4	89.0	84.8
130	—	87.4	85.3	82.5	79.4
140	—	—	78.8	76.6	74.0
150	—	—	72.6	71.1	68.9
160	—	—	66.5	65.7	64.3
170	—	—	60.5	60.3	59.7
180	—	—	—	55.6	55.0
190	—	—	—	50.0	50.9
200	—	—	—	—	47.1

For complete chart, refer to www.cranelibrary.com.

THIS CHART IS ONLY A GUIDE AND SHOULD NOT BE USED TO OPERATE THE CRANE.
The individual crane's load chart, operating instructions and other instructional plates must be read and understood prior to operating the crane

Boom combinations
VPC-MAX™

B60:500 VPC-MAX™ main boom combinations

Boom length ft	Main boom inserts ft			
	39.4 H	19.7 M	39.4 M	39.4 L
137.8	1	0	1	0
157.5	1	1	1	0
177.2	1	0	2	0
196.9	1	1	2	0
216.5	1	0	3	0
236.2	1	1	3	0
255.9	1	0	3	1
275.6	1	1	3	1
295.3	1	0	3	2
315.0	1	1	3	2
334.6	1	0	3	3
354.3	1	1	3	3
374.0	1	0	4	3
393.7	1	1	4	3

H - heavy inserts
M - medium inserts
L - light inserts

No. 148 fixed Jib combinations

Fixed jib ft	Fixed Jib inserts ft	
	19.7 ft	39.4 ft
39.4	0	0
59.1	1	0
78.7	0	1
98.4	1	1
118.1	0	2
137.8	1	2

LJ10:501 VPC-MAX™ luffing jib combinations

Luffing jib length ft	Luffing jib inserts ft	
	19.7	39.4
78.7	0	0
98.4	1	0
118.1	0	1
137.8	1	1
157.5	0	2
177.2	1	2
196.9	0	3
216.5	1	3
236.2	0	4
255.9	1	4
275.6	0	5
295.3	1	5
315.0	0	6

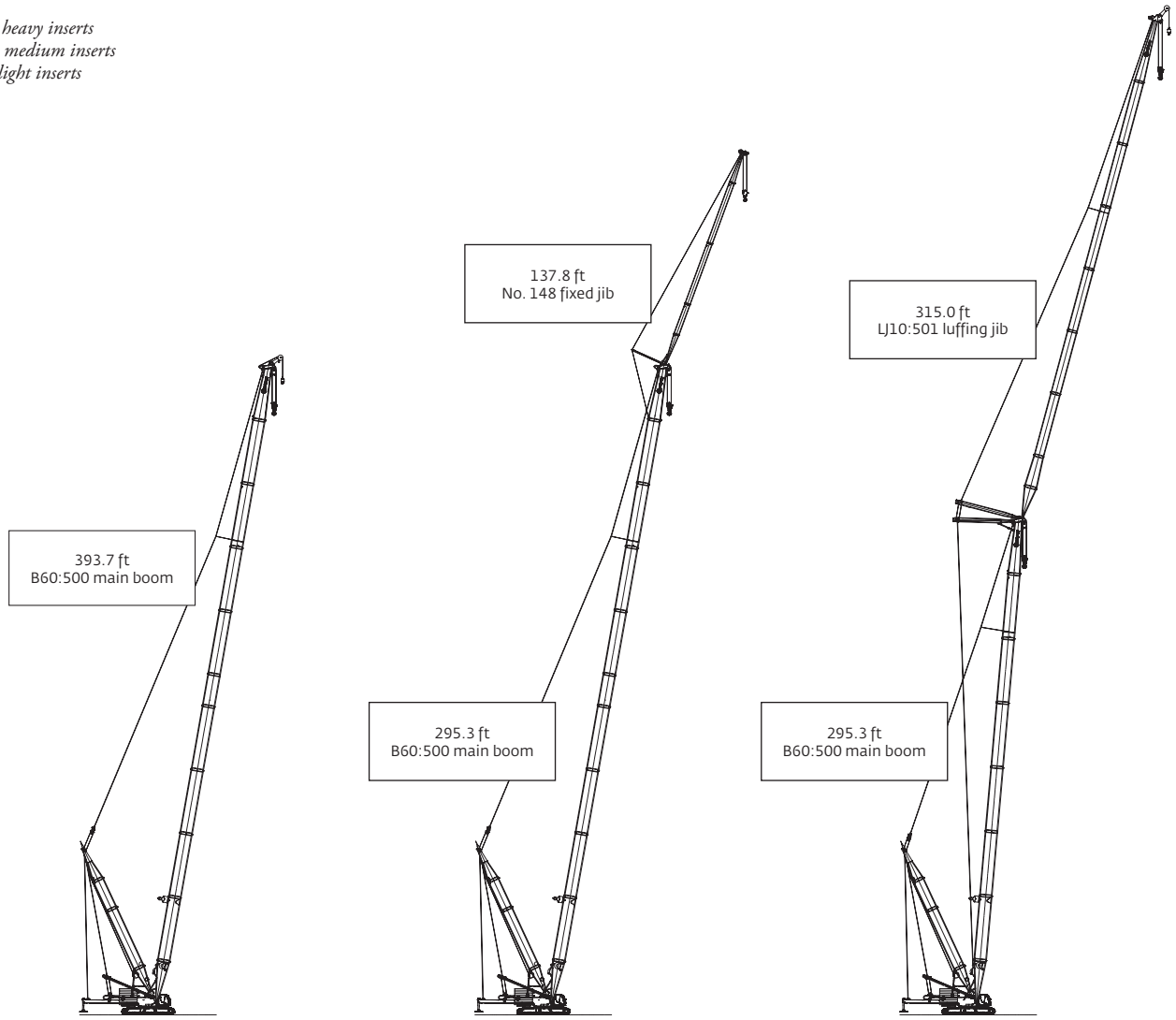

THIS CHART IS ONLY A GUIDE AND SHOULD NOT BE USED TO OPERATE THE CRANE.
The individual crane's load chart, operating instructions and other instructional plates must be read and understood prior to operating the crane

B60:500 boom with VPC-MAX™

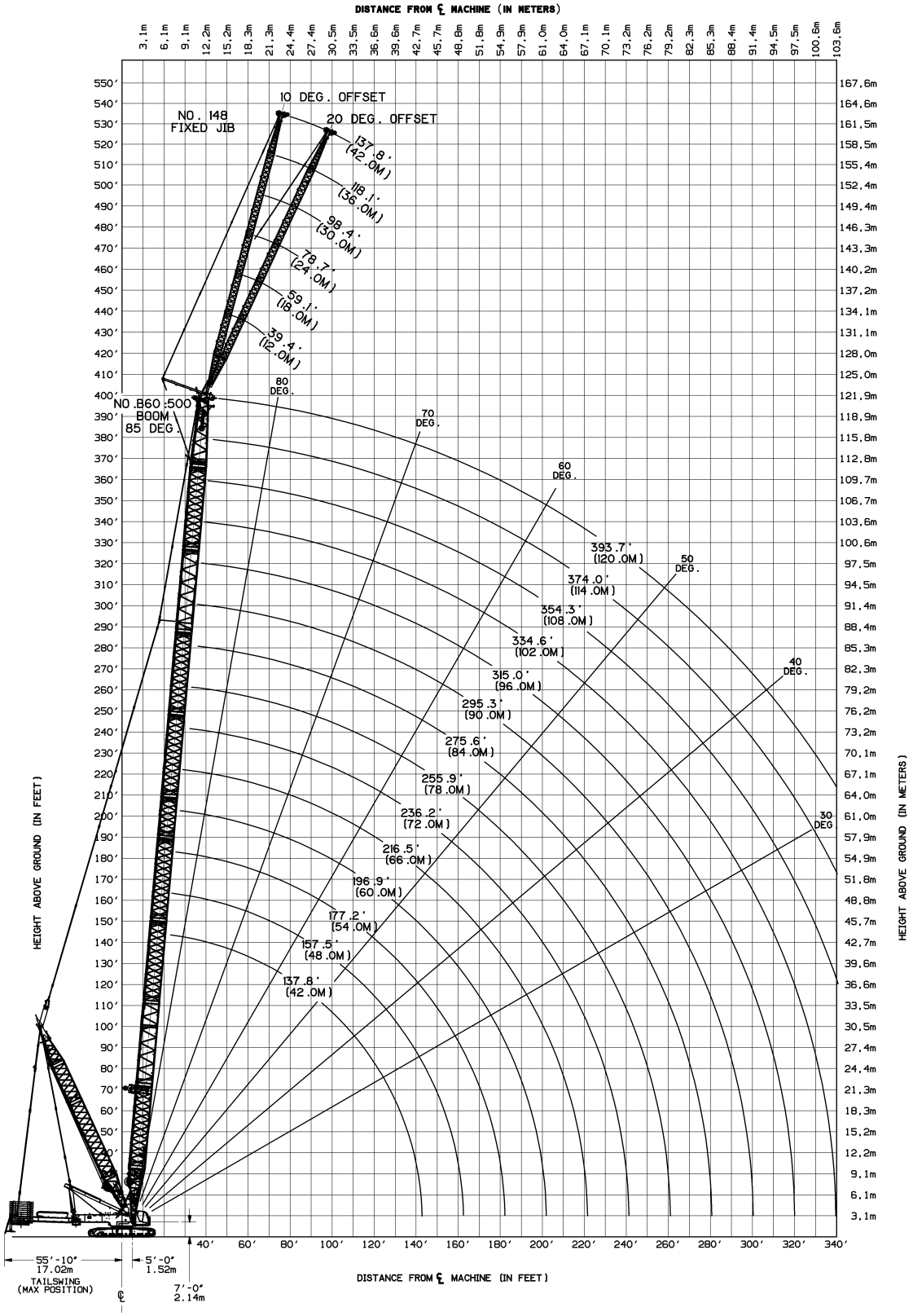

THIS CHART IS ONLY A GUIDE AND SHOULD NOT BE USED TO OPERATE THE CRANE.
The individual crane's load chart, operating instructions and other instructional plates must be read and understood prior to operating the crane

Main boom load charts

VPC-MAX™

B60:500 boom with VPC-MAX™ Series 3														
474,100 lb counterweight														
360° Rating							lb x 1000							
Radius ft	Boom length ft													
	138	157	177	197	217	236	256	276	295	315	335	354	374	394
22	661.3	—	—	—	—	—	—	—	—	—	—	—	—	—
26	661.3	612.9	553.9	500.1	—	—	—	—	—	—	—	—	—	—
30	661.3	612.9	553.9	500.1	449.9	390.2	—	—	—	—	—	—	—	—
34	633.3	602.2	553.9	500.1	449.9	390.2	324.7	275.7	—	—	—	—	—	—
38	600.5	572.6	544.5	500.1	449.9	390.2	324.7	275.7	231.2	199.4	168.1	—	—	—
40	585.1	558.7	532.1	500.1	449.9	390.2	324.7	275.7	231.2	199.4	168.1	147.4	—	—
45	549.8	526.6	503.2	477.0	449.9	390.2	324.7	275.7	231.2	199.4	168.1	147.4	129.2	113.5
50	518.1	497.5	476.8	453.4	430.7	389.6	324.7	275.7	231.2	199.4	168.1	147.4	129.2	113.5
60	509.3	489.2	452.8	411.6	393.2	372.7	324.7	275.7	231.2	199.4	168.1	147.4	129.2	113.5
70	418.5	418.2	418.6	411.6	376.5	344.1	324.7	275.7	231.2	199.4	168.1	147.4	129.2	113.5
80	352.9	352.6	352.9	351.9	351.8	341.6	318.6	275.7	231.2	199.4	168.1	147.4	129.2	113.3
90	304.0	303.6	303.9	302.8	302.7	301.3	300.8	272.9	229.9	199.4	168.1	147.4	129.0	113.1
100	266.1	265.6	265.9	264.8	264.7	263.2	262.7	258.6	220.9	199.4	168.1	147.4	128.7	112.9
110	235.9	235.4	235.6	234.5	234.3	232.9	232.3	230.7	210.9	199.4	167.1	143.0	127.6	112.2
120	211.2	210.6	210.8	209.7	209.5	208.1	207.5	205.9	200.9	199.4	163.6	135.5	124.7	110.7
130	190.6	190.0	190.2	189.1	188.9	187.4	186.8	185.2	184.9	183.4	156.5	128.5	118.5	108.3
140	—	172.6	172.8	171.7	171.5	170.0	169.4	167.8	167.5	165.9	149.7	122.0	112.6	103.1
150	—	157.6	157.9	156.7	156.5	155.0	154.4	152.8	152.5	150.9	143.5	115.8	107.3	98.2
160	—		144.9	143.8	143.6	142.1	141.5	139.8	139.6	138.0	137.4	110.2	102.2	93.7
170	—	—	133.5	132.4	132.3	130.8	130.2	128.5	128.2	126.6	126.1	105.1	97.4	89.4
180	—	—	—	122.4	122.3	120.8	120.2	118.5	118.3	116.6	116.1	100.3	93.0	85.3
190	—	—	—	113.4	113.3	111.9	111.3	109.6	109.4	107.7	107.2	96.1	89.0	81.6
200	—	—	—	—	105.3	103.9	103.3	101.7	101.4	99.8	99.2	92.2	85.3	78.1
210	—	—	—	—	98.1	96.7	96.1	94.5	94.3	92.6	91.6	88.7	81.8	74.9
220	—	—	—	—	—	90.1	89.6	88.0	87.8	86.1	84.4	84.0	78.8	72.0
230	—	—	—	—	—	84.1	83.7	82.1	81.9	80.2	78.1	78.1	75.4	68.6
240	—	—	—	—	—		78.2	76.7	76.5	74.8	72.4	72.7	69.3	62.6
250	—	—	—	—	—	—	73.2	71.7	71.5	69.9	67.5	67.8	63.8	57.3
260	—	—	—	—	—	—	—	67.1	66.9	65.3	63.1	63.0	58.9	52.5
270	—	—	—	—	—	—	—	62.8	62.7	61.1	59.3	58.9	54.5	48.1
280	—	—	—	—	—	—	—	—	58.7	57.1	56.0	55.1	50.6	44.1
290	—	—	—	—	—	—	—	—	55.0	53.5	53.1	51.5	47.1	40.5
300	—	—	—	—	—	—	—	—	—	50.0	49.7	48.1	44.0	37.3
310	—	—	—	—	—	—	—	—	—	46.8	46.5	44.9	41.3	34.3
320	—	—	—	—	—	—	—	—	—	—	43.5	41.9	38.9	31.7
330	—	—	—	—	—	—	—	—	—	—	—	39.1	37.0	29.3
340	—	—	—	—	—	—	—	—	—	—	—	36.5	35.5	27.2
350	—	—	—	—	—	—	—	—	—	—	—	—	33.5	25.4
360	—	—	—	—	—	—	—	—	—	—	—	—	31.1	22.7
370	—	—	—	—	—	—	—	—	—	—	—	—	—	20.1
380	—	—	—	—	—	—	—	—	—	—	—	—	—	17.7

THIS CHART IS ONLY A GUIDE AND SHOULD NOT BE USED TO OPERATE THE CRANE.
The individual crane's load chart, operating instructions and other instructional plates must be read and understood prior to operating the crane

No. 148 fixed jib on B60:500 boom with VPC-MAX™

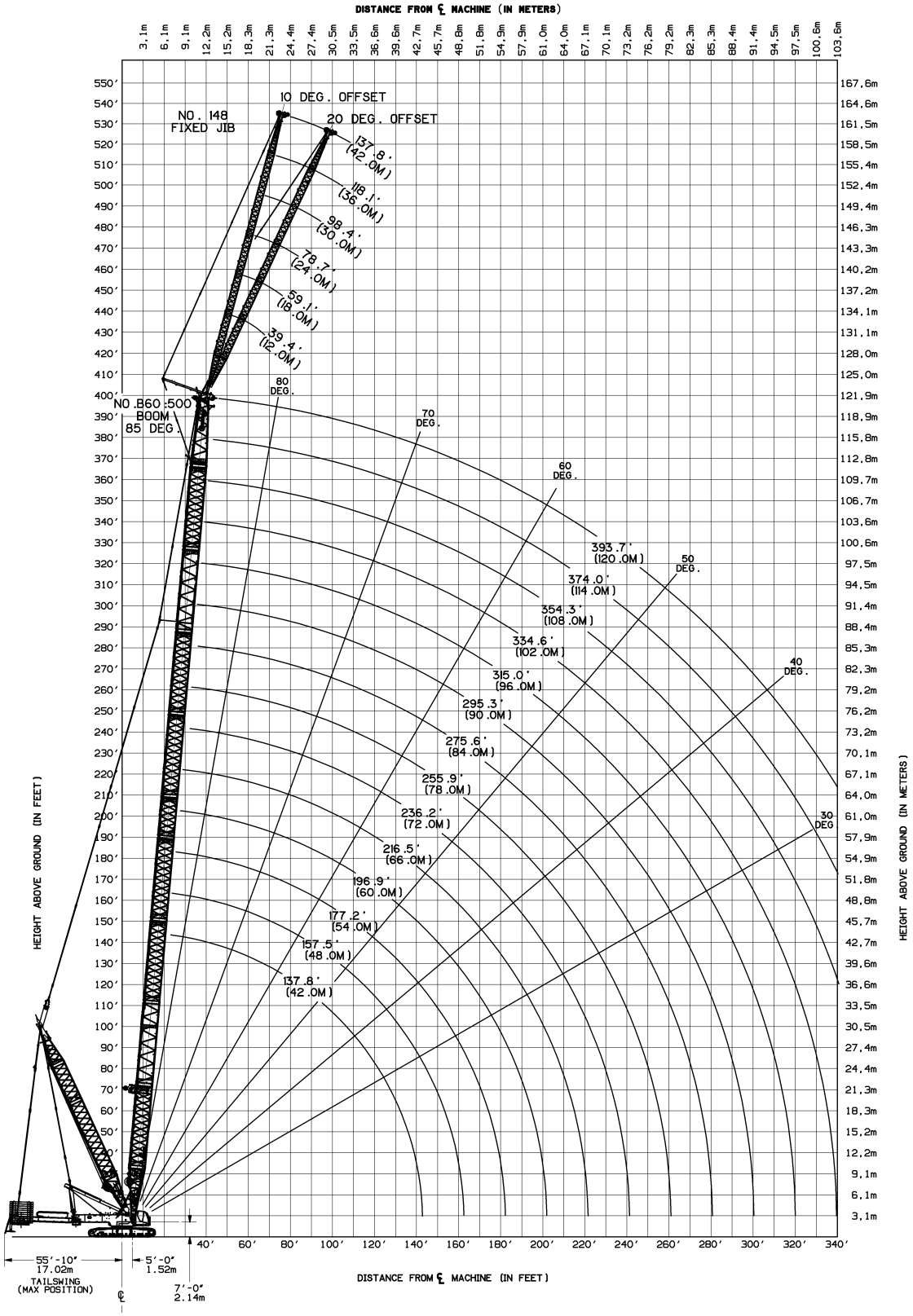

THIS CHART IS ONLY A GUIDE AND SHOULD NOT BE USED TO OPERATE THE CRANE.
The individual crane's load chart, operating instructions and other instructional plates must be read and understood prior to operating the crane

Fixed jib load charts

VPC-MAX™

No. 148 fixed jib on B60:500 boom with VPC-MAX™ Series 3

474,100 lb counterweight **360° Rating** **lb x 1000**

39 ft jib length	10° offset				
Radius ft	boom length ft				
	138	197	256	315	354
38	143.3	143.3	—	—	—
40	143.3	143.3	142.7	—	—
50	143.3	143.3	141.7	128.0	98.8
60	143.3	143.3	140.7	126.5	98.8
70	139.1	143.3	139.8	125.1	98.8
80	125.9	142.9	139.1	123.8	98.8
90	115.2	136.8	138.2	122.5	98.8
100	106.1	127.1	136.9	121.2	98.6
120	92.0	111.5	124.8	117.2	88.0
140	81.5	99.4	113.0	106.8	78.8
160	73.8	89.9	103.5	97.8	71.0
180	—	82.3	95.3	90.3	64.4
200	—	76.3	88.3	84.1	58.7
220	—	71.5	82.5	78.9	54.0
240	—	—	77.6	74.6	49.9
260	—	—	68.9	65.1	46.6
280	—	—	60.5	56.9	43.8
300	—	—	—	49.8	41.6
320	—	—	—	43.5	39.8
340	—	—	—	37.9	35.6
360	—	—	—	—	31.0
380	—	—	—	—	26.5

39 ft jib length	20° offset				
Radius ft	boom length ft				
	138	197	256	315	354
50	127.8	136.8	129.5	—	—
60	116.3	126.8	127.9	112.5	96.0
70	106.8	118.2	125.6	111.6	96.0
80	98.9	110.8	118.9	110.7	96.0
90	92.2	104.4	112.8	109.7	95.0
100	86.5	98.7	107.4	108.9	90.2
120	77.3	89.2	98.1	104.8	81.3
140	70.5	81.7	90.4	97.0	73.5
160	65.7	75.7	84.2	89.9	66.7
180	—	70.8	78.9	83.8	60.9
200	—	67.1	74.5	78.7	55.9
220	—	64.6	70.8	74.4	51.7
240	—	—	67.8	70.9	48.0
260	—	—	65.5	65.6	45.0
280	—	—	—	57.3	42.5
300	—	—	—	50.1	40.6
320	—	—	—	43.7	39.1
340	—	—	—	—	35.7
360	—	—	—	—	31.1

79 ft jib length	10° offset				
Radius ft	boom length ft				
	138	197	256	315	354
50	—	82.2	—	—	—
55	79.9	80.6	79.0	—	—
60	77.9	79.2	78.0	71.6	—
70	74.3	76.4	75.9	70.3	67.3
80	71.0	73.8	73.9	69.0	66.3
90	67.9	71.3	72.0	67.7	65.3
100	62.4	68.9	70.2	66.4	64.3
120	53.6	62.6	66.8	64.0	62.4
140	46.9	55.5	62.3	61.6	58.4
160	41.7	49.9	56.5	59.4	52.8
180	37.6	45.1	51.5	57.2	48.0
200	34.3	41.4	47.5	53.4	43.8
220	—	38.1	44.0	49.8	40.2
240	—	35.5	41.0	46.6	37.0
260	—	33.4	38.4	43.7	34.3
280	—	—	36.3	41.2	32.0
300	—	—	34.4	39.1	30.1
320	—	—	32.9	37.2	28.4
340	—	—	—	35.5	27.1
360	—	—	—	34.1	26.1
380	—	—	—	31.6	25.5
400	—	—	—	—	25.4
420	—	—	—	—	21.7

79 ft jib length	20° offset				
Radius ft	boom length ft				
	138	197	256	315	354
60	—	68.9	—	—	—
70	60.3	64.0	66.1	62.8	—
80	55.5	59.8	62.4	61.9	60.0
90	51.5	56.1	59.2	60.9	59.3
100	48.0	52.8	56.2	59.4	58.6
120	42.2	47.3	51.1	54.5	55.4
140	37.8	42.9	46.8	50.4	51.5
160	34.2	39.3	43.2	46.9	48.1
180	31.5	36.3	40.2	43.9	44.2
200	29.5	33.8	37.6	41.2	40.6
220	—	31.7	35.4	38.9	37.5
240	—	30.1	33.5	36.9	34.9
260	—	—	31.9	35.1	32.5
280	—	—	30.5	33.6	30.4
300	—	—	29.5	32.2	28.7
320	—	—	—	31.1	27.2
340	—	—	—	30.1	26.1
360	—	—	—	29.4	25.3
380	—	—	—	—	24.9

For complete chart, refer to www.cranelibrary.com.

THIS CHART IS ONLY A GUIDE AND SHOULD NOT BE USED TO OPERATE THE CRANE.
The individual crane's load chart, operating instructions and other instructional plates must be read and understood prior to operating the crane

No. 148 fixed jib on B60:500 boom with VPC-MAX™ Series 3

474,100 lb counterweight **360° Rating** **lb x 1000**

98 ft jib length	10° offset				
Radius ft	boom length ft				
	138	197	256	315	354
50	—	65.2	—	—	—
55	63.8	64.1	—	—	—
60	62.3	62.9	61.8	—	—
70	59.4	60.8	60.1	57.9	55.4
80	56.3	58.5	58.6	56.8	54.5
90	53.3	56.5	57.0	55.7	53.6
100	50.6	54.1	55.4	54.6	52.8
120	45.8	49.9	52.1	52.4	51.0
140	40.3	46.1	48.8	50.0	49.3
160	35.4	42.3	45.8	47.5	47.4
180	31.6	38.0	43.2	45.2	43.2
200	28.4	34.5	39.6	43.0	39.3
220	25.9	31.5	36.5	40.8	36.0
240	—	29.0	33.8	38.0	33.1
260	—	27.0	31.5	35.5	30.5
280	—	25.2	29.4	33.3	28.4
300	—	—	27.6	31.3	26.4
320	—	—	26.1	29.6	24.8
340	—	—	24.8	28.1	23.4
360	—	—	—	26.7	22.3
380	—	—	—	25.5	21.5
400	—	—	—	24.6	21.0
420	—	—	—	—	21.0
440	—	—	—	—	19.5

98 ft jib length	20° offset				
Radius ft	boom length ft				
	138	197	256	315	354
70	52.4	53.3	—	—	—
80	48.5	51.3	51.6	50.7	49.2
90	44.7	48.3	50.1	49.6	48.5
100	41.4	45.2	47.8	48.5	47.6
120	36.0	40.1	43.1	45.4	45.9
140	31.8	36.0	39.2	41.7	42.5
160	28.5	32.7	35.9	38.5	39.5
180	25.8	29.9	33.1	35.8	36.9
200	23.7	27.6	30.8	33.4	34.6
220	22.1	25.6	28.7	31.4	32.6
240	—	24.0	26.9	29.5	30.7
260	—	22.6	25.4	27.9	28.6
280	—	21.7	24.1	26.6	26.6
300	—	—	23.0	25.3	24.9
320	—	—	22.1	24.2	23.5
340	—	—	—	23.2	22.3
360	—	—	—	22.4	21.3
380	—	—	—	21.7	20.7
400	—	—	—	—	20.3
420	—	—	—	—	20.3

138 ft jib length	10° offset				
Radius ft	boom length ft				
	138	197	256	315	354
60	—	42.1	—	—	—
65	40.5	41.2	40.4	—	—
70	39.2	40.2	39.9	37.9	—
80	36.8	38.3	38.5	37.3	33.7
90	34.4	36.4	37.1	36.4	33.0
100	32.3	34.6	35.6	35.6	32.4
120	28.3	31.1	32.8	33.4	31.2
140	24.9	28.0	30.1	31.2	29.9
160	22.0	25.3	27.6	29.1	28.1
180	19.5	22.9	25.3	27.0	26.4
200	17.4	20.7	23.3	25.2	24.8
220	15.5	18.8	21.5	23.4	23.3
240	13.9	17.2	19.8	21.9	21.9
260	12.7	15.7	18.2	20.4	20.6
280	—	14.3	16.9	19.1	19.4
300	—	13.3	15.7	17.9	18.2
320	—	12.4	14.6	16.8	17.2
340	—	—	13.6	15.7	16.2
360	—	—	12.9	14.8	15.4
380	—	—	12.2	14.0	14.6
400	—	—	—	13.2	13.8
420	—	—	—	12.6	13.1
440	—	—	—	12.1	12.5
460	—	—	—	—	12.0
480	—	—	—	—	11.7

138 ft jib length	20° offset				
Radius ft	boom length ft				
	138	197	256	315	354
80	—	32.4	—	—	—
90	29.8	30.8	31.2	31.0	—
100	28.0	29.4	30.0	30.0	28.4
120	24.7	26.6	27.7	28.1	26.8
140	22.0	24.1	25.5	26.3	25.3
160	19.6	21.9	23.6	24.6	23.9
180	17.5	20.0	21.8	23.1	22.5
200	15.9	18.3	20.2	21.5	21.3
220	14.4	16.8	18.7	20.3	20.0
240	13.2	15.5	17.4	19.0	18.9
260	12.4	14.4	16.3	17.9	18.0
280	—	13.4	15.3	16.9	17.0
300	—	12.7	14.3	15.9	16.1
320	—	12.2	13.6	15.1	15.3
340	—	—	12.9	14.3	14.6
360	—	—	12.4	13.7	14.0
380	—	—	—	13.1	13.3
400	—	—	—	12.6	12.9
420	—	—	—	12.3	12.4
440	—	—	—	—	12.1
460	—	—	—	—	11.9

For complete chart, refer to www.cranelibrary.com.

THIS CHART IS ONLY A GUIDE AND SHOULD NOT BE USED TO OPERATE THE CRANE.
The individual crane's load chart, operating instructions and other instructional plates must be read and understood prior to operating the crane

Luffing jib working range diagram

VPC-MAX™

LJ10:501 luffing jib on B60:500 boom with VPC-MAX™

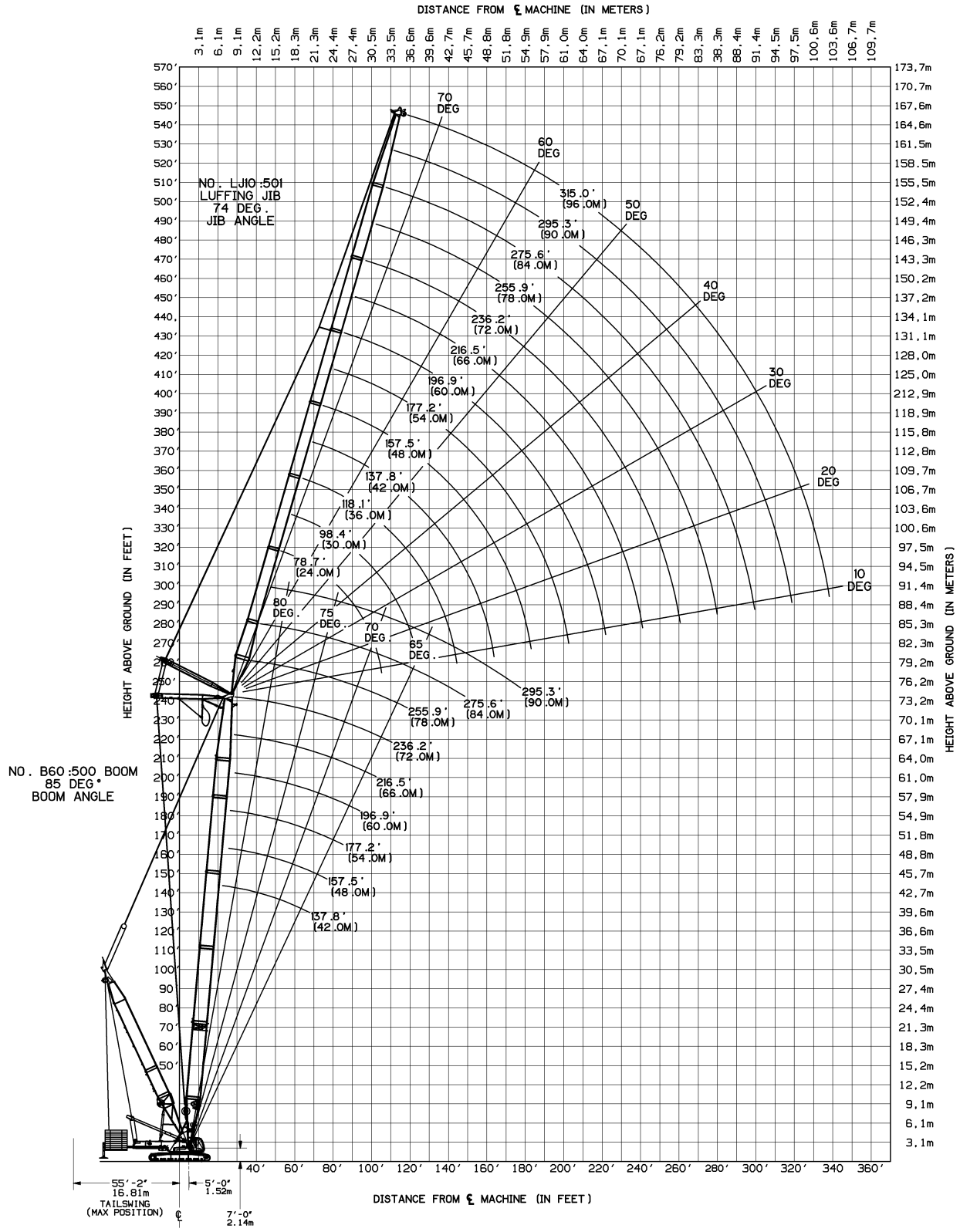

THIS CHART IS ONLY A GUIDE AND SHOULD NOT BE USED TO OPERATE THE CRANE.
The individual crane's load chart, operating instructions and other instructional plates must be read and understood prior to operating the crane

LJ10:501 luffing jib on B60:500 boom with VPC-MAX™ Series 3

474,100 lb counterweight **360° Rating** **lb x 1000** **85° boom angle**

138 ft boom length

Radius ft	Luffing jib length ft				
	79	138	197	236	315
45	330.7	–	–	–	–
50	314.4	–	–	–	–
60	249.6	195.3	–	–	–
70	208.3	178.5	–	–	–
80	179.8	163	124.8	–	–
90	160.1	146.5	120.8	88.2	–
100	–	132.2	115.1	86.9	–
120	–	108.6	103.4	84.3	40.8
140	–	90.2	92.3	76.6	38.4
160	–	–	82.1	68.3	36.2
180	–	–	71.5	59.8	34.2
200	–	–	60.2	51.2	32.4
220	–	–	–	43	30.8
240	–	–	–	35.5	29.5
260	–	–	–	–	28.4
280	–	–	–	–	27.5
300	–	–	–	–	18.9
320	–	–	–	–	10

177 ft boom length

Radius ft	Luffing jib length ft				
	79	138	197	236	315
50	291.4	–	–	–	–
60	240.3	–	–	–	–
70	201.9	174.1	–	–	–
80	175.1	160.8	113.7	–	–
90	156.3	147.6	112.6	–	–
100	146.3	133.9	110	78.8	–
120	–	110.9	100	77.2	38.7
140	–	92.6	90.2	74	36.8
160	–	73.5	80	66.7	35
180	–	–	70.1	59.1	33.3
200	–	–	61.2	51.2	31.7
220	–	–	–	43.5	30.3
240	–	–	–	36.2	29
260	–	–	–	–	28
280	–	–	–	–	27.1
300	–	–	–	–	19.5
320	–	–	–	–	11

217 ft boom length

Radius ft	Luffing jib length ft				
	79	138	197	236	315
60	223.2	–	–	–	–
70	189.3	153.3	–	–	–
80	165	151.8	–	–	–
90	147.6	140.6	95.3	–	–
100	136.4	125.6	94.7	68.8	–
120	–	104.1	89.9	67.7	34.5
140	–	90.4	78.7	66.2	33.2
160	–	79.4	68.1	60	31.9
180	–	–	58.9	53.1	30.5
200	–	–	51.6	46.9	29.3
220	–	–	47.7	41.5	28.1
240	–	–	–	35.1	27.1
260	–	–	–	29.3	25.6
280	–	–	–	–	23.2
300	–	–	–	–	16.7
320	–	–	–	–	10.2

276 ft boom length

Radius ft	Luffing jib length ft				
	79	138	197	236	315
60	147.2	–	–	–	–
70	143.6	–	–	–	–
80	138	98.6	–	–	–
90	126.4	96.6	67.1	–	–
100	115	94	66.5	51.5	–
120	–	81.3	64.5	50.6	–
140	–	69.7	57.5	48.6	27.2
160	–	61.5	50.4	43.7	26.4
180	–	–	44.1	38.8	25.5
200	–	–	39.1	34.4	24.1
220	–	–	36	30.6	22
240		–	–	27.7	19.8
260	–	–	–	25.5	17.9
280	–	–	–	–	16.1
300	–	–	–	–	14.6
320	–	–	–	–	10.5

THIS CHART IS ONLY A GUIDE AND SHOULD NOT BE USED TO OPERATE THE CRANE.
The individual crane's load chart, operating instructions and other instructional plates must be read and understood prior to operating the crane

Specifications

Upperworks

Engine

Cummins Model QSG-12 diesel, 720 cubic inch displacement, inline 6 cylinder, 450 hp @1800 governed rpm. Emissions Level: U.S. EPA/ CARB Tier 4 Final/ EU Stage IV Compliant.
Included are engine block heater (240 V), engine oil pan heater (240 V), air intake grid heater, disconnect clutch for cold weather starting, exhaust aftertreatment, variable speed hydraulic cooling fan, hydraulic oil cooler, radiator, charge air cooler, and fuel cooler.
Also included are two 12 volt maintenance-free, Group 8D batteries, 1375 CCA at 0°F, 24 volt starting and 110 amp alternator.
Single diesel fuel tank is 255 gal capacity complete with physical level indicator on tank and electronic level indicator in the operator's cabin.
Optional: Cold-weather package with heater for fluids.

Crane Control System

The Crane Control System offers a user-friendly interface, two full graphic displays mounted horizontally for better visibility, a jog dial for easier data input and ergonomic joysticks.

Hydraulic system

Efficient, independent, full power multi-functional control is achieved in all operating modes through a combination of open and closed loop system optimized by Manitowoc's proprietary onboard Crane Control System.
145 gal hydraulic reservoir is equipped with sight gauge, breather, clean out access, 100 micron mesh internal strainers, and 40 micron inlet screens. Primary filtration system is equipped with 8 micron absolute filters.

Drums

Basic machine is equipped with an independent main drum assembly and independent luffing/aux drum assembly mounted in the boom butt. Each drum is driven by a variable-displacement hydraulic motor through a planetary reduction. Drums are grooved for 28 mm wire rope. Main hoist has 36,760 lb linepull on all layers with a 27.5 in drum diameter; luffing/aux drum has 30,000 lb linepull on all layers with a 23.6 in drum diameter.

Powered hoisting/ lowering operation with automatic spring applied, hydraulically released multi-disc brakes, and drum rotation indicators standard.

Basic machine is equipped with a rigging winch mounted in the boom butt. Drum utilizes 8 mm wire rope with 2,250 lb max linepull capability.

- Optional: auxiliary hoists – Rotating bed mounted, can be fitted with one or two auxiliary drums grooved for 28 mm wire rope, and both having 36,760 lb linepull on all layers. These two drums can be used independently or in tandem to suit a variety of lift applications.
- Optional: freefall hoists – Rotating bed mounted, can be fitted with one or two freefall equipped drums grooved for 28 mm wire rope. Freefall function is controlled by wet disk brake manually applied by foot pedal with locking latch in operator's cabin. Operator may select freefall or powered lowering mode using a selector switch in the cab.

Moving mast system

Independent boom hoist consists of a single drum grooved for 26 mm diameter wire rope. Includes 1,395 ft of 26 mm diameter wire rope to accommodate 24 part live mast reeving. Drum is powered by a variable displacement hydraulic motor coupled to an internal spring applied, hydraulically released multi-disc brake and planetary gearbox equipped with ratcheting pawl and drum rotation indicators. Live mast system assembly module includes live mast, boom hoist drum and rear sheave nest. The assembly weighs 19,800 lb and may be removed from the rotating bed for an upperworks module transport weight reduction.

Swing system

Rotating bed mounted independent swing is powered by a fixed displacement hydraulic motor coupled to an internal brake and planetary reduction engaging a 9 ft 10 in diameter triple row roller turntable bearing.
Swing system maximum speed: 2,0 rpm.

Boom support system

Moving mast is 30 ft long and connects the boom hoist reeving to the high strength steel boom suspension strap rigging. When used with optional self-erect package, the mast with integral hydraulic cylinder is used for handling crawlers, counterweight and boom sections.
Spring cushioned boom stop and automatic electrical boom stop are standard.

Variable position counterweight™

The Variable Position Counterweight™ (VPC™) system, with only rotating bed counterweight, maintains optimum crane stability by automatically positioning crane counterweight based on boom length and load radius. No carbody counterweight is required.
The crane can be equipped with 386,200 lb of upperworks counterweight made up of a single piece counterweight tray and sixteen 22,000 lb counterweight boxes or with 474,400 lb of upperworks counterweight with twenty 22,000 lb counterweight boxes. Left and right side counterweights are interchangeable and common with the Model MLC650 counterweight.

Vision operator's cab

The Vision Cab™ is a fully enclosed and insulated galvannealed steel module mounted to the left front corner of the rotating bed. Module is equipped with power tilt, sliding door, large safety glass windows, front and roof windshield wipers, dome light, sun visor and shade, fire extinguisher, air conditioning, swing and travel alarms, and radio/CD player. Operator's station swings over front of rotating bed and includes nylon protective window covers for transport.

Lowerworks

Carbody

Connects rotating bed and crawler frames. Each frame is mounted to the carbody with FACT connection system and hydraulic power-actuated pins.

Crawlers

Crawler assemblies are 32 ft long with 48 in wide cast steel crawler pads and automatically lubricated intermediate rollers. Left and right side crawlers are interchangeable to provide assembly/disassembly flexibility on jobsites. Each crawler is powered independently by a variable displacement hydraulic motor connected via screw together hydraulic quick disconnects. Crawlers provide ample tractive effort for travel and counter-rotating with full rated load.

Maximum ground speed of .8 mph.

- Optional: 60 in wide treads.

Attachments

No. 500 boom

The liftcrane is equipped with 98.4 ft No. 500 basic boom consisting of 26.2 ft butt, 39.4 ft insert with luffing/aux hoist sheaves and 32.8 ft top with eight 30 in diameter sheaves with tapered roller bearings. Includes rope guides, boom hoist wire rope, boom angle indicator and hook and weight ball. The boom utilizes Manitowoc's exclusive FACT boom connection system. Includes spring cushioned boom stop, automatic boom stop, hydraulically powered boom hinge system including cylinder, hydraulic piping, operating controls, and locking device.

- Optional: 19.7 ft, 39.4 ft, and 39.4 ft with wire rope suspension No. 500 boom inserts with steel boom suspension straps for a maximum boom length of 334.6 ft.

Detachable upper boom point with 30 in diameter sheave with tapered roller bearings grooved for 28 mm rope with rope guard.

No. 148 fixed jib

39.4 ft No. 148 fixed jib including pin 19.7 ft butt, 19.7 ft top, jib strut and mounting hardware.

- Optional: 19.7 ft and 39.4 ft No. 148 inserts with pin connectors and pendants for a maximum jib length of 137.8 ft.

No. 501 luffing jib

78.7 ft No. 501 luffing jib includes 19.7 ft butt, 19.7 ft transition insert, 39.4 ft top, basic straps, main strut, jib strut, backstay straps and jib point guide wheel.

- Optional: 19.7 ft and 39.4 ft No. 501 luffing jib inserts with steel boom suspension straps for a maximum luffing jib length of 315.0 ft.

VPC-MAX™

The VPC-MAX™ components include:

- 98.4 ft of No. 503 mast consisting of a 19.7 ft butt, 19.7 ft insert, 39.4 ft insert with sheave, and 19.7 ft top.
- One additional swing drive (for a total of two) mounted on the front of the rotating bed. Each swing drive is powered by a fixed-displacement hydraulic motor coupled to a planetary reduction gearbox and internal spring applied, hydraulically released multi-disc brake.
- VPC-MAX™ counterweight actuator assembly consisting of a high strength steel frame, 2 drive assemblies, hydraulic piping and controls.
- VPC-MAX™ counterweight beam assembly consisting of a high strength steel frame fitted with gear teeth and roller path prepared to receive VPC-MAX™ actuator assembly.
- The base machine VPC™ actuator assembly, crane counterweight tray and counterweight are utilized.

The VPC-MAX™ system maintains optimum crane stability by automatically positioning crane counterweight behind the crane's centerline of rotation based on lifted load, boom length and load radius.

Optional equipment

- Self-erect system including carbody jacking cylinders with pads, self-erect cylinder fitted to the live mast assembly and crawler handling chains.
- Hydraulic Test Kit: recommended to properly analyze the performance of the CCS control system.
- Service Interval Kits for the regularly scheduled maintenance of general crane operations.
- Special paint color(s) other than Manitowoc standard red and black.
- Custom vinyl decal(s) of customer name and/or logo from artwork supplied by customer.
- Export Packaging: basic crane, boom and jib sections.
- Additional load blocks available upon request.

Manitowoc Cranes

Regional headquarters

Americas
Manitowoc, Wisconsin, USA
Tel: +1 920 684 6621
Fax: +1 920 683 6277

Shady Grove, Pennsylvania, USA
Tel: +1 717 597 8121
Fax: +1 717 597 4062

Europe and Africa
Dardilly, France - TOWERS
Tel: +33 (0)4 72 18 20 20
Fax: +33 (0)4 72 18 20 00

Wilhelmshaven, Germany - MOBILE
Tel: +49 (0) 4421 294 0
Fax: +49 (0) 4421 294 4301

China
Shanghai, China
Tel: +86 21 6457 0066
Fax: +86 21 6457 4955

Middle East and Greater Asia-Pacific
Singapore
Tel: +65 6264 1188
Fax: +65 6862 4040

Dubai, UAE
Tel: +971 4 8862677
Fax: +971 4 8862678/79

Manitowoc Crane Care™

Manitowoc Finance™

This document is non-contractual. Constant improvement and engineering progress make it necessary that we reserve the right to make specification, equipment, and price changes without notice. Illustrations shown may include optional equipment and accessories and may not include all standard equipment.

©2017 The Manitwooc Company, Inc.

Form No. MLC300 PG
2-2017

www.manitowoc.com